REGULAR MEETING – OCTOBER 22, 2024

On this the 22nd day of October at 9:00 A.M. the Honorable Commissioners Court of Blanco County convened in a REGULAR MEETING at a special meeting place thereof in the District Courtroom of the Blanco County Courthouse Annex located at 101 E. Cypress Dr., Johnson City, Blanco County, Texas, the following members to-wit:

| | |
|---|---|
| BRETT BRAY | COUNTY JUDGE |
| TOMMY WEIR | COMMISSIONER PCT. 1 |
| EMIL UECKER | COMMISSIONER PCT. 2 |
| CHRIS LIESMANN | COMMISSIONER PCT. 3 |
| CHARLES RILEY | COMMISSIONER PCT. 4 |
| LAURA WALLA | COUNTY CLERK |

DRAFT

Call to order and roll call.

Judge Bray and all four County Commissioners were present.

Pledge of Allegiance(s).

Invocation.

Christina Harris

PUBLIC COMMENTS– opportunity for the general public to address the Court on any agenda item. Comments are limited to 3 minutes.

Kenneth Welch – Item #11

1. Consider approval of minutes of prior Commissioners Court meeting(s). Vote on any action taken. (Judge Bray)

COMMISSIONER RILEY moves to dispense with the reading of the minutes from the regular meeting October 8 and the Special Meeting on October 11 and to approve the minutes as presented, seconded by Commissioner Liesmann. Judge Bray called for discussion and vote.

JUDGE BRAY – YES.
COMMISSIONER WEIR – YES.
COMMISSIONER UECKER – YES.
COMMISSIONER LIESMANN – YES.

COMMISSIONER RILEY – YES. MOTION CARRIED. 5/0

2. Consider ratifying and/or approving line-item transfers as presented. Vote on any action taken. (Judge Bray)

No line-item transfers presented.

3. Consider ratifying and/or approval of the outstanding bills. Vote on any action taken. (Judge Bray)

COMMISSIONER LIESMANN made the motion to ratify the bills in the amount of $7,030.41 and to approve the outstanding bills in the amount of $465,389.10, seconded by Commissioner Uecker. Judge Bray called for discussion and vote.

JUDGE BRAY – YES.
COMMISSIONER WEIR – YES.
COMMISSIONER UECKER – YES.
COMMISSIONER LIESMANN – YES.
COMMISSIONER RILEY – YES. MOTION CARRIED. 5/0

4. Discussion and possible action regarding Lights Spectacular application for HOT funds. Vote on any action taken. (Judge Bray, HOT Coordinator A Fry)

COMMISSIONER LIESMANN made the motion to approve Lights Spectacular HOT funds in the amount of $12,500 and use that as opposed to the community expense, seconded by Commissioner Riley. Judge Bray called for discussion and vote.

JUDGE BRAY – YES.
COMMISSIONER WEIR – YES.
COMMISSIONER UECKER – YES.
COMMISSIONER LIESMANN – YES.
COMMISSIONER RILEY – YES. MOTION CARRIED. 5/0

5. Discuss, consider, and adopt a resolution authorizing the submission of a Texas Community Development Block Grant program application to the Texas Department of Agriculture for the 2025-2026 Community Development Fund. Vote on any action taken. (Judge Bray & Grant Coordinator A Fry)

COMMISSIONER WEIR would like to make the motion adopting a resolution authorizing the submission of a Texas Community Development Block Grant program application for the Texas Department of Agriculture for the 2025-26 Community Development Fund, seconded by Commissioner Uecker. Judge Bray called for discussion and vote.

JUDGE BRAY – YES.
COMMISSIONER WEIR – YES.

DRAFT

COMMISSIONER UECKER – YES.
COMMISSIONER LIESMANN – YES.
COMMISSIONER RILEY – YES. MOTION CARRIED. 5/0

6. Authorization for the County Judge to enter into a lease with Pitney Bowes for a postage machine at the South Annex Vote on any action taken. (Judge Bray & Treasurer Swift)

COMMISSIONER LIESMANN made the motion authorizing the County Judge to enter into a lease with Pitney Bowes for a postage machine at the South Annex, seconded by Commissioner Riley. Judge Bray called for discussion and vote.

JUDGE BRAY – YES.
COMMISSIONER WEIR – YES.
COMMISSIONER UECKER – YES.
COMMISSIONER LIESMANN – YES.
COMMISSIONER RILEY – YES. MOTION CARRIED. 5/0

7. Consider resolution for FY2025 Texas Indigent Defense Commission Grant. Vote on any action taken. (Judge Bray & Auditor Wenmohs)

COMMISSIONER WEIR made the motion to approve the resolution for FY2025 Texas Indigent Defense Commission Grant, seconded by Commissioner Riley. Judge Bray called for discussion and vote.

JUDGE BRAY – YES.
COMMISSIONER WEIR – YES.
COMMISSIONER UECKER – YES.
COMMISSIONER LIESMANN – YES.
COMMISSIONER RILEY – YES. MOTION CARRIED. 5/0

8. Discussion and action regarding the hiring of Ms. Janie Salazar as custodian for the South Annex. Service to be performed twice per month at $200 per time. Vote on any action taken. (Judge Bray & Judge Hernandez)

COMMISSIONER RILEY makes motion approving the hiring of Ms. Janie Salazar as custodian for the South Annex with services to be performed twice per month at $200 per time, seconded by Commissioner Weir. Judge Bray called for discussion and vote.

JUDGE BRAY – YES.
COMMISSIONER WEIR – YES.
COMMISSIONER UECKER – YES.
COMMISSIONER LIESMANN – YES.
COMMISSIONER RILEY – YES. MOTION CARRIED. 5/0

DRAFT

9. Consider a proclamation supporting "Operation Green Light for Veterans." Vote on any action taken. (Judge Bray)

COMMISSIONER WEIR would like to make the motion to accept the proclamation supporting "Operation Green Light," seconded by Commissioner Uecker. Judge Bray called for discussion and vote.

JUDGE BRAY – YES.
COMMISSIONER WEIR – YES.
COMMISSIONER UECKER – YES.
COMMISSIONER LIESMANN – YES.
COMMISSIONER RILEY – YES. MOTION CARRIED. 5/0

10. Consider authorization for the County Judge to accept and sign KeyTrak Purchase Quote & Maintenance Quote as outlined in the Sheriff's Office section of the FY24-25 budget, pending County Attorney approval. Vote on any action taken. (Judge Bray & Sheriff Jackson)

COMMISSIONER RILEY makes the motion authorizing the County Judge to accept and sigh KeyTrak Purchase Quote & Maintenance Quote as outlined in the Sheriff's Office section of the FY24-25 budget pending County Attorney approval, seconded by Commissioner Liesmann. Judge Bray called for discussion and vote.

JUDGE BRAY – YES.
COMMISSIONER WEIR – YES.
COMMISSIONER UECKER – YES.
COMMISSIONER LIESMANN – YES.
COMMISSIONER RILEY – YES. MOTION CARRIED. 5/0

11. Consider authorization for the County Judge to accept and sign Tuff Shed sales order and agreement as outlined in the LEC Maintenance section of the FY24-25 budget. Vote on any action taken. (Judge Bray & Sheriff Jackson)

COMMISSIONER RILEY makes the motion authorizing the County Judge to accept and sign Tuff Shed sales order and agreement as outlined in the LEC Maintenance section of the FY24-25 budget, seconded by Commissioner Weir. Judge Bray called for discussion and vote.

JUDGE BRAY – YES.
COMMISSIONER WEIR – YES.
COMMISSIONER UECKER – YES.
COMMISSIONER LIESMANN – YES.
COMMISSIONER RILEY – YES. MOTION CARRIED. 5/0

DRAFT

12. Consider authorization for the County Judge to accept and sign Tyler Technologies Software Service agreement for eCitations software as outlined in the Sheriff's Office section of the FY24-25 budget. Vote on any action taken. (Judge Bray & Sheriff Jackson)

COMMISSIONER RILEY moves to authorize the County Judge to accept and sign Tyler Technologies Software Service agreement for eCitations software as outlined in the Sheriff's Office section of the FY24-25 budget, seconded by Commissioner Uecker. Judge Bray called for discussion and vote.

JUDGE BRAY – YES.
COMMISSIONER WEIR – YES.
COMMISSIONER UECKER – YES.
COMMISSIONER LIESMANN – YES.
COMMISSIONER RILEY – YES. MOTION CARRIED. 5/0

13. Open, review, and possibly award bid(s) for projects within the County for FY2024-25. Vote on any action taken. (Commissioner Liesmann)

COMMISSIONER LIESMANN made the motion to accept all of these bids, and we can utilize the vendor that benefits us during the time of the project and for the location of the project, seconded by Commissioner Riley. Judge Bray called for discussion and vote.

JUDGE BRAY – YES.
COMMISSIONER WEIR – YES.
COMMISSIONER UECKER – YES.
COMMISSIONER LIESMANN – YES.
COMMISSIONER RILEY – YES. MOTION CARRIED. 5/0

COMMISSIONER LIESMANN made the motion that he would like to do the same in this scenario and all the use of either of the two (2) vendors that submitted a bid, seconded by Commissioner Weir. Judge Bray called for discussion and vote.

JUDGE BRAY – YES.
COMMISSIONER WEIR – YES.
COMMISSIONER UECKER – YES.
COMMISSIONER LIESMANN – YES.
COMMISSIONER RILEY – YES. MOTION CARRIED. 5/0

14. Discussion and action to authorize Frontier Communications to install fiber cable along Tejas Trail & Lindemann Lane to include boring under said roadways, pending County Attorney approval. Vote on any action taken. (Commissioner Riley)

DRAFT

COMMISSIONER RILEY makes the motion to authorize Frontier Communications to install fiber cable along Tejas Trail & Lindeman Lane to include boring under said roadways, pending County Attorney approval, seconded by Commissioner Weir. Judge Bray called for discussion and vote.

JUDGE BRAY – YES.
COMMISSIONER WEIR – YES.
COMMISSIONER UECKER – YES.
COMMISSIONER LIESMANN – YES.
COMMISSIONER RILEY – YES. MOTION CARRIED. 5/0

15. Approve the specs and purchase of 2 – 60" vertical balers for the Recycle Center as outlined in the capital equipment section of the FY24-25 budget. Vote on any action taken. (Commissioner Riley)

COMMISSIONER RILEY moves to approve the specs and purchase of 2 – 60" vertical balers for the Recycle Center as outlined in the capital equipment section of the FY24-25 budget, seconded by Commissioner Liesmann. Judge Bray called for discussion and vote.

JUDGE BRAY – YES.
COMMISSIONER WEIR – YES.
COMMISSIONER UECKER – YES.
COMMISSIONER LIESMANN – YES.
COMMISSIONER RILEY – YES. MOTION CARRIED. 5/0

16. Consider burn ban or any other related action. Vote on any action taken. (Commissioner Riley)

COMMISSIONER RILEY moves to put the burn ban on until November 26th, 2024, at Twelve noon (12:00) p.m., seconded by Commissioner Weir. Judge Bray called for discussion and vote.

JUDGE BRAY – YES.
COMMISSIONER WEIR – YES.
COMMISSIONER UECKER – YES.
COMMISSIONER LIESMANN – YES.
COMMISSIONER RILEY – YES. MOTION CARRIED. 5/0

17. Adjourn.

COMMISSIONER UECKER made the motion to adjourn, seconded by Commissioner Riley. Judge Bray called for discussion and vote.

JUDGE BRAY – YES.
COMMISSIONER WEIR – YES.

DRAFT

COMMISSIONER UECKER – YES.
COMMISSIONER LIESMANN – YES.
COMMISSIONER RILEY – YES. MOTION CARRIED. 5/0

The above and foregoing minutes were examined and approved in Open Court this _____day of November 2024.

I Laura Walla, County Clerk, Blanco County, Texas attest that the foregoing is a true and correct accounting of the Commissioner's Court authorized proceedings for October 22, 2024

_____

County Clerk and Ex-Officio Member of Commissioner's Court, Blanco County, Texas

DRAFT

# BLANCO COUNTY MONTHLY ESTIMATED PAYROLL APPROVAL FORM

## November 12, 2024

| | #10 General Fund | #15 Road & Bridge Fund | #64 SB22 | Total |
|---|---|---|---|---|
| Salaries | $392,666.59 | $30,021.22 | $14,371.68 | $437,059.49 |
| Soc/Med | $ 30,038.99 | $ 2,296.63 | 1,099.43 | $ 33,435.05 |
| Retirement | $ 37,774.53 | $ 2,888.04 | 1,382.56 | $ 42,045.13 |
| Insurance | $ 66,798.01 | $ 8,347.28 | | $ 75,145.29 |
| Group Term Life | $ 379.42 | $ 49.76 | | $ 429.18 |
| Total | $527,657.54 | $43,602.93 | $16,853.67 | $588,114.14 |
| TOTAL PAYROLL TO BE APPROVED | | | | $588,114.14 |

County Treasurer _____ Date 11-7-24

County Judge _____ Date _____

Commissioner Pct 1 _____ Date _____

Commissioner Pct 2 _____ Date _____

Commissioner Pct 3 _____ Date _____

Commissioner Pct 4 _____ Date _____

# All Official Reports are IN

# No Line-Item Transfers

# Blanco County Commissioners' Court

November 12, 2024

## Invoice File Listing By Fund for Approval

| Fund | Description | Disbursement |
|---|---|---|
| 010 | General Fund | $ 484,388.47 |
| 015 | Road & Bridge Fund | $ 11,962.90 |
| 017 | Records Management Clerk | $ 1,388.91 |
| 026 | JP4 Technology Fund | $ 1,917.06 |
| 037 | Election Services Fund | $ 1,900.95 |
| 045 | Jail Inmate Commissary Fund | $ 167.10 |
| 050 | 2023 Certificate of Obligation | $ 450,212.68 |
| Total | | $ 951,938.07 |

The attached list of Claims Payable have been examined & approved for payment by the Assistant County Auditor as provided by the Texas LGC 113.064 & 113.065

Attest Asst. County Auditor: Mbatlyn Shield Date 11-7-24

The attached list of Claims Payable have been examined & approved for payment by the Commissioners' Court as provided by the Texas LGC 115.021 & 115.022

County Judge _____ Date _____

Commissioner Pct 1 _____ Commissioner Pct 3 _____

Commissioner Pct 2 _____ Commissioner Pct 4 _____

COPY

| DEPARTMENT NAME-OF-VENDOR | INVOICE-NO | S | DESCRIPTION-OF-INVOICE | AMOUNT |
|---|---|---|---|---|
| 0400-COUNTY JUDGE EXPENSES | | | | |
| FUELMAN | 90199 | A | FUEL - FIRE MARSHAL | 127.35 |
| TEXAS JUDICIAL ACADEMY | 90034 | A | DUES | 200.00 |
| DEPARTMENT TOTAL | | | | 327.35 |
| 0410-COUNTY CLERK | | | | |
| PERRY OFFICE PLUS | 90118 | A | INV#IN-1560898 CO CLERK | 216.38 |
| DEPARTMENT TOTAL | | | | 216.38 |
| 0411-ELECTIONS ADMINISTRATOR | | | | |
| AMAZON CAPITAL SERVICES, INC | 90059 | A | INV#17H6-47JK-7T11 EA | 159.90 |
| BLANCO COUNTY TAX ASSESSOR-COLLECT | 90069 | A | LICENSE TAG #9082038 EA | 7.50 |
| CARD SERVICE CENTER | 90213 | A | 4707 1205 3610 0666 SWIFT | 300.00 |
| ELECTION SYSTEMS & SOFTWARE | 90073 | A | INV#CD2099153 EA | 3,256.71 |
| ELECTION SYSTEMS & SOFTWARE | 90074 | A | INV#CD2099484 EA | 374.10 |
| ELECTION SYSTEMS & SOFTWARE | 90075 | A | INV#CD2100740 EA | 23.20 |
| ELECTION SYSTEMS & SOFTWARE | 90076 | A | INV#CD2101517 EA | 475.37 |
| ELECTION SYSTEMS & SOFTWARE | 90077 | A | INV#CD2103213 EA | 3,462.49 |
| ELECTION SYSTEMS & SOFTWARE | 90078 | A | INV#CD2103766 EA | 188.63 |
| ELECTION SYSTEMS & SOFTWARE | 90079 | A | INV#CD2103767 EA | 359.51 |
| HART INTERCIVIC | 90097 | A | INV#098370 EA | 2,216.00 |
| KNOW INK | 90099 | A | INV#15223 EA | 270.00 |
| STAPLES | 90128 | A | INV#6014771185 EA | 461.59 |
| STAPLES | 90129 | A | INV#6014771189 EA | 127.76 |
| STAPLES | 90130 | A | INV#6012422326 EA | 11.28 |
| STAPLES | 90131 | A | INV#6014771187 EA | 32.97 |
| DEPARTMENT TOTAL | | | | 11,727.01 |
| 0415-COUNTY ATTORNEY | | | | |
| ODIORNE FEED/RANCH SUPPLY INC | 90107 | A | INV#218712 CO ATTY | 391.96 |
| TDCAA | 90191 | A | INV#256579 CO ATTY | 85.00 |
| DEPARTMENT TOTAL | | | | 476.96 |
| 0420-TAX ASSESSOR/COLLECTOR | | | | |
| HC & HL TECHNOLOGY SOLUTIONS LLC | 90013 | A | INV #B2785 TAC OFFICE CAMERS | 3,000.00 |
| KRISTEN SPIES | 90174 | A | CHECKS | 359.01 |
| DEPARTMENT TOTAL | | | | 3,359.01 |
| 0425-COUNTY SHERIFF | | | | |
| AMAZON CAPITAL SERVICES, INC | 90054 | A | INV#14R6-G4HY-WRCM LEC | 59.99 |
| AMAZON CAPITAL SERVICES, INC | 90055 | A | INV#1YR7-C3PH-KH4G LEC | 8.88 |
| AMAZON CAPITAL SERVICES, INC | 90057 | A | INV#1994-1VLD-CY97 LEC | 51.02 |
| AMAZON CAPITAL SERVICES, INC | 90058 | A | INV#171X-JXFC-C6YM LEC | 95.66 |
| AMAZON CAPITAL SERVICES, INC | 90147 | A | INV#1WQF-M3K1-DT7F LEC | 118.14 |
| AMAZON CAPITAL SERVICES, INC | 90148 | A | INV#199T-JHRH-3HXW LEC | 143.82 |
| AMAZON CAPITAL SERVICES, INC | 90149 | A | INV#19JW-776N-44CW LEC | 97.45 |
| AMAZON CAPITAL SERVICES, INC | 90150 | A | INV#1YM4-JX77-GNWC LEC | 18.00 |
| AMAZON CAPITAL SERVICES, INC | 90151 | A | INV#1767-NQVM-1MGT LEC | 49.48 |
| ARMAND ADVERTISING, LLC | 90152 | A | INV#3447 LEC | 297.92 |
| AUTO CHLOR SERVICES, LLC | 90046 | A | INV #8739747 LEC | 219.95 |
| AXON ENTERPRISE, INC | 90047 | A | INV #INUS293985 LEC | 3,760.08 |
| BAYLOR SCOTT WHITE | 90048 | A | PATIENT #TXP9414F | 412.65 |
| BEVERLY MUSGROVE | 90064 | A | INV#2414-BCSO-11622 LEC | 300.20 |
| BEVERLY MUSGROVE | 90065 | A | INV#2414-BCSO-11623 LEC | 517.25 |
| BLANCO COUNTY ESD 2 | 90007 | A | PATIENT #09021992 JAIL | 372.60 |
| CARD SERVICE CENTER | 90210 | A | 4707 1205 3610 0542 JACKSON | 15.50 |
| CARD SERVICE CENTER | 90211 | A | 4707 1205 3610 0542 JACKSON | 64.89 |

| DEPARTMENT NAME-OF-VENDOR | INVOICE-NO | S | DESCRIPTION-OF-INVOICE | AMOUNT |
|---|---|---|---|---|
| CARD SERVICE CENTER | 90218 | A | 4707 1205 3610 9397 CO JUDGE | 932.00 |
| CENTRALSQUARE TECHNOLOGIES | 90071 | A | INV#422794() LEC | 5,302.36 |
| EXPRESS AUTOMOTIVE SERVICE | 90082 | A | INV#10966 LEC | 164.43 |
| EXPRESS AUTOMOTIVE SERVICE | 90083 | A | INV#11042 LEC | 115.91 |
| EXPRESS AUTOMOTIVE SERVICE | 90158 | A | INV#11213 LEC | 598.55 |
| FUELMAN | 90206 | A | FUEL - LEC | 6,393.19 |
| GALLS INC | 90087 | A | INV#29291736 LEC | 438.44 |
| GT DISTRIBUTORS, INC | 90093 | A | INV#UINV0057245 LEC | 532.74 |
| GT DISTRIBUTORS, INC | 90094 | A | INV#INV#1020946 LEC | 268.05 |
| GT DISTRIBUTORS, INC | 90162 | A | INV#INV1018879 LEC | 708.45 |
| GT DISTRIBUTORS, INC | 90163 | A | INV#UINV0057344 LEC | 14.50 |
| GT DISTRIBUTORS, INC | 90164 | A | INV#UNIV0057348 LEC | 662.92 |
| GT DISTRIBUTORS, INC | 90165 | A | INV#INV1018924 LEC | 171.20 |
| GT DISTRIBUTORS, INC | 90166 | A | INV#INV1021441 LEC | 817.75 |
| ICS JAIL SUPPLIES INC. | 90098 | A | INV#INV804262 LEC | 266.84 |
| LAW ENFORCEMENT SYSTEMS INC | 90175 | A | INV#223285 LEC | 158.00 |
| LEATRICE ELSBURY | 90100 | A | REIMBURSEMENT | 1,272.22 |
| NORTH BLANCO COUNTY EMS | 90023 | A | PATIENT #09021992 JAIL | 378.49 |
| NORTH BLANCO COUNTY EMS | 90024 | A | PATIENT #09071979 JAIL | 544.44 |
| OFFICESUPPLY.COM | 90110 | A | INV#6135349 LEC | 109.58 |
| OFFICESUPPLY.COM | 90111 | A | INV#6161881 LEC | 68.96 |
| OFFICESUPPLY.COM | 90112 | A | INV#6156194 LEC | 239.86 |
| PERFORMANCE FOOD SERVICE | 90116 | A | INV#2475940 LEC | 1,494.29 |
| PERFORMANCE FOOD SERVICE | 90117 | A | INV#2483121 LEC | 3,200.60 |
| PERFORMANCE FOOD SERVICE | 90180 | A | INV#2490577 LEC | 1,159.39 |
| PETERSON TIRE | 90120 | A | INV#BL56423 LEC | 30.00 |
| PETERSON TIRE | 90121 | A | INV#JC46895 LEC | 437.00 |
| PETERSON TIRE | 90122 | A | INV#JC46955 LEC | 60.00 |
| PETERSON TIRE | 90123 | A | INV#JC46839 LEC | 448.00 |
| PETERSON TIRE | 90182 | A | INV#BL56604 LEC | 20.00 |
| POLICE & SHERIFFS PRESS | 90183 | A | INV#110972 LEC | 110.95 |
| ROBERT WOODRING | 90184 | A | REIMBURSEMENT | 194.75 |
| SAM HOUSTON STATE UNIVERSITY | 90185 | A | CONF#410586731 LEC | 542.15 |
| SECURITAS TECHNOLOGY CORP | 90028 | A | INV #6004579505 LEC | 487.00 |
| SEYMOURS INC. | 90126 | A | INV#58409 LEC | 854.61 |
| SHERIFFS' ASSOC OF TEXAS | 90187 | A | SAT MEMBERSHIPS | 900.00 |
| SHSU - TEXAS JAIL ASSOC | 90186 | A | DUES | 510.00 |
| SIRCHIE SUPPLY | 90127 | A | INV#0668133-IN LEC | 259.47 |
| TERRI LYNN BECKMAN | 90124 | A | INV#17 LEC | 4,350.00 |
| TEXAS A&M ENGINEERING EXT SRV | 90133 | A | INV#EH7310889 LEC | 312.00 |
| VERIZON WIRELESS | 90050 | A | IEM #356071121038518 LEC | 32.49 |
| VERIZON WIRELESS | 90051 | A | IEM #356071120994133 LEC | 32.49 |
| VERIZON WIRELESS | 90052 | A | IEM #357508459863024 LEC | 32.49 |
| DEPARTMENT TOTAL | | | | 42,230.04 |
| 0432-COUNTY AUDITOR | | | | |
| AMAZON CAPITAL SERVICES, INC | 90143 | A | INV#1CXR-X7KH-1R6N CO AUDITOR | 47.96 |
| DEPARTMENT TOTAL | | | | 47.96 |
| 0435-INDIGENT HEALTH CARE | | | | |
| JOHNSON CITY PHARMACY | 90014 | A | INV #1001 INDIGENT | 411.60 |
| SCOTT & WHITE HOSPITAL | 90027 | A | PATIENT #15503149 INDIGENT | 43.87 |
| DEPARTMENT TOTAL | | | | 455.47 |
| 0440-COUNTY EXTENSION AGENCY | | | | |
| CARLEY HOWELL | 90155 | A | AG AGENT TRAVEL | 187.20 |
| GRETCHEN L. SANDERS | 90161 | A | EXT AGENT TRAVEL | 179.56 |

| DEPARTMENT NAME-OF-VENDOR | INVOICE-NO | S | DESCRIPTION-OF-INVOICE | AMOUNT |
|---|---|---|---|---|
| PERRY OFFICE PLUS | 90181 | A | INV#IN-1562907 AGRILIFE | 355.42 |
| TEXAS AGRILIFE EXTENSION SERVICE | 90134 | A | INV#E510900 AGRILIFE | 1,341.00 |
| DEPARTMENT TOTAL | | | | 2,063.18 |
| 0445-EMERGENCY MANAGEMENT | | | | |
| AMAZON CAPITAL SERVICES, INC | 90146 | A | INV#1MMF-6RQ7-GXJP ER MGMT | 603.20 |
| CARD SERVICE CENTER | 90208 | A | 4707 1205 3610 0385 LIESMANN | 562.22 |
| FUELMAN | 90196 | A | FUEL - ER MGMT | 116.93 |
| JOHNSON CITY HYDRO GAS | 90172 | A | INV#6569 ER MGMT | 70.30 |
| THIRD COAST DISTRIBUTING, LLC | 90140 | A | INV#152195 PCT 3 | 38.79 |
| THIRD COAST DISTRIBUTING, LLC | 90192 | A | INV#980135 ER MGMT | 220.99 |
| DEPARTMENT TOTAL | | | | 1,612.43 |
| 0450-JUDICIAL EXPENSES | | | | |
| BURNET COUNTY TREASURER | 90009 | A | INV #QTR4-FY24 PUBLIC DEFENDERS | 12,657.17 |
| COWART LAW OFFICE | 90036 | A | 33RD CASE #1802 | 500.00 |
| HILL COUNTRY FORENSICS LLC | 90012 | A | CASE #24-00528 JP 1 | 2,900.00 |
| KELLY GROSSMAN | 90044 | A | COURT REPORTER - COUNTY | 680.40 |
| SHELL & SHELL | 90029 | A | 424TH CV08157 | 382.50 |
| TREY BROWN, PLLC | 90038 | A | 33RD CR02228 | 400.00 |
| DEPARTMENT TOTAL | | | | 17,520.07 |
| 0455-COMMUNITY SERVICES | | | | |
| AMERICAN LEGION TX POST 352 | 90004 | A | 2024-2025 BUDGET REQUEST | 1,000.00 |
| BLANCO GOOD SAMARITAN CENTER | 90008 | A | 2024-2025 BUDGET REQUEST | 5,000.00 |
| TEXAS WILDLIFE DAMAGE MGMT FUND | 90035 | A | INV #256626 OCTOBER 2024 | 2,400.00 |
| DEPARTMENT TOTAL | | | | 8,400.00 |
| 0500-COURTHOUSE EXPENSES | | | | |
| 1000BULBS.COM | 90141 | A | INV#W04187589 | 518.05 |
| 3 PHASE ELECTRIC, LLC | 90142 | A | INV#2253 LEC | 828.57 |
| AMAZON CAPITAL SERVICES, INC | 90145 | A | INV#1KM6-TTVN-HW6J | 1,198.03 |
| BILL'S LOCK & KEY | 90066 | A | INV#31364 LEC | 5.00 |
| CARD SERVICE CENTER | 90209 | A | 4707 1205 3610 0344 COUNTY | 12.64 |
| CARD SERVICE CENTER | 90215 | A | 4707 1205 3610 0666 SWIFT | 90.85 |
| CARD SERVICE CENTER | 90216 | A | 4707 1205 3610 0666 SWIFT | 899.00 |
| CARD SERVICE CENTER | 90219 | A | 4707 1205 3610 9397 CO JUDGE | 111.44 |
| DECOTY | 90010 | A | INV #990642 | 104.80 |
| GRAVES HUMPHRIES, STAHL, LIMITED | 90011 | A | REPORT #COL005 JP 1 | 1,061.72 |
| GULF COAST PAPER CO. INC. | 90168 | A | INV#2590725 | 1,074.56 |
| GULF COAST PAPER CO. INC. | 90169 | A | INV#2590726 S ANNEX | 386.11 |
| HC & HL TECHNOLOGY SOLUTIONS LLC | 90045 | A | INV #B2803 | 12,177.16 |
| JOE HERNANDEZ | 90171 | A | REIMBURSEMENT | 102.55 |
| JOHNSON CITY PUBLICATIONS LP | 90170 | A | INV#49341 | 67.00 |
| JOHNSON CONTROLS | 90015 | A | INV #24379358 LEC | 2,153.38 |
| JOHNSON CONTROLS | 90016 | A | INV #24386430 LEC | 353.77 |
| LOWER COLORADO RIVER AUTHORITY | 90019 | A | INV #TWER0006328 | 311.46 |
| MONACO FAMILY ENTERPRISES, INC | 90176 | A | INV#LS24048594 LEC | 180.24 |
| MOURSUND INSURANCE AGENCY | 90020 | A | INV #24639 SMITH BOND | 50.00 |
| MOURSUND INSURANCE AGENCY | 90021 | A | INV #24649 BUCY BOND | 50.00 |
| MOURSUND INSURANCE AGENCY | 90022 | A | INV #24638 DIST CLERK | 189.00 |
| MUNICIPAL EMERGENCY SERVICES | 90177 | A | ORDER#SO2015542 LEC | 300.00 |
| ODIORNE FEED/RANCH SUPPLY INC | 90108 | A | INV#218300 LEC | 153.75 |
| ODIORNE FEED/RANCH SUPPLY INC | 90178 | A | INV#218896 | 29.00 |
| OLD ANNEX OFFICE SOLUTIONS | 90043 | A | NOVEMBER 2024 | 1,800.00 |
| OUTLAW LUMBER & HARDWARE, LLC | 90115 | A | INV#132062 | 42.00 |
| SAN JUANA M. SALAZAR | 90053 | A | CLEANING SERVICES SOUTH ANNEX | 400.00 |

| DEPARTMENT NAME-OF-VENDOR | INVOICE-NO | S | DESCRIPTION-OF-INVOICE | AMOUNT |
|---|---|---|---|---|
| STAN KLEIN, AIA NCARB | 90030 | A | INV #24-0092 CUPOLA PROJECT | 3,341.25 |
| TERMINIX | 90031 | A | INV #347792 LEC | 149.00 |
| TERMINIX | 90032 | A | INV #347793 ANNEX | 110.00 |
| TERMINIX | 90033 | A | INV #347799 SOUTH ANNEX | 93.00 |
| TEXAS A&M AGRILIFE | 90132 | A | REF#86052135 PCT 2 | 55.00 |
| TEXAS A&M AGRILIFE | 90188 | A | REF#86051781 - UECKER, EMIL | 70.00 |
| TEXAS A&M AGRILIFE | 90189 | A | REF#85836271 - WEIR, TOMMY | 70.00 |
| TEXAS A&M AGRILIFE | 90190 | A | REF#85836099 - RILEY, CHARLES | 70.00 |
| TEXAS DEPARTMENT OF STATE HEALTH SE | 90135 | A | INSPECTION#2351 | 150.00 |
| TK ELEVATOR | 90037 | A | INV #3008145163 | 1,032.01 |
| VESTED NETWORKS | 90042 | A | INV #14546 | 54.00 |
| WW GRAINGER, INC | 90088 | A | INV#9267183706 | 147.69 |
| WW GRAINGER, INC | 90089 | A | INV#9267183706 S ANNEX | 87.58 |
| WW GRAINGER, INC | 90090 | A | INV#9267183706 LEC | 80.65 |
| WW GRAINGER, INC | 90091 | A | INV#9293446754 N ANNEX | 90.96 |
| WW GRAINGER, INC | 90092 | A | INV#9286546248 N ANNEX | 48.36 |
| DEPARTMENT TOTAL | | | | 30,299.58 |
| 0505-MAINTENANCE DEPARTMENT | | | | |
| AMAZON CAPITAL SERVICES, INC | 90061 | A | INV#13X7-6XD7-HTHL MAINTENANCE | 105.98 |
| FUELMAN | 90200 | A | FUEL - MAINTENANCE | 243.90 |
| DEPARTMENT TOTAL | | | | 349.88 |
| 0515-JUSTICE OF THE PEACE PCT #1 | | | | |
| NORTHEAST TEXAS DATA CORP. | 90025 | A | REPORT #CAS017 JP 1 | 96.00 |
| DEPARTMENT TOTAL | | | | 96.00 |
| 0525-CONSTABLE PCT #1 | | | | |
| FUELMAN | 90197 | A | FUEL - CONSTABLE 1 | 186.18 |
| GT DISTRIBUTORS, INC | 90167 | A | INV#DPT000336107 CONST 1 | 579.80 |
| DEPARTMENT TOTAL | | | | 765.98 |
| 0530-CONSTABLE PCT #4 | | | | |
| AXON ENTERPRISE, INC | 90005 | A | INV #INUS284184 CONSTABLE #4 | 939.07 |
| FUELMAN | 90198 | A | FUEL - CONSTABLE 4 | 498.62 |
| GT DISTRIBUTORS, INC | 90095 | A | INV#INV1019020 CONST 4 | 1,200.00 |
| GT DISTRIBUTORS, INC | 90096 | A | INV#INV1019020 CONST 4 | 528.75 |
| DEPARTMENT TOTAL | | | | 3,166.44 |
| 0535-911-COUNTY EXPENSES | | | | |
| BIS CONSULTING, LLC | 90006 | A | INV #12351 911 | 3,090.00 |
| DEPARTMENT TOTAL | | | | 3,090.00 |
| 0545-VERTERAN SERVICES | | | | |
| AMERICAN LEGION TX POST 352 | 90062 | A | MEMBER ID#353022383 VSO | 50.00 |
| DEPARTMENT TOTAL | | | | 50.00 |
| 0550-RECYCLING COORDINATOR | | | | |
| BAMS DIESEL SERVICE | 90153 | A | ORDER#3560 RECYCLING | 776.90 |
| BLANCO HYDRO GAS CO. | 90154 | A | ACCT#2411-0 RECYCLING | 28.00 |
| CARD SERVICE CENTER | 90214 | A | 4707 1205 3610 0666 SWIFT | 204.90 |
| DEPARTMENT TOTAL | | | | 1,009.80 |
| 0560-GENERAL FUND CAPITAL EQUIPMENT | | | | |
| ELECTION SYSTEMS & SOFTWARE | 90080 | A | INV#CD2106574 EA | 13,335.00 |
| ELECTION SYSTEMS & SOFTWARE | 90081 | A | INV#CD2106912 EA | 125.16 |
| JOHNSON CITY SIGN SHOP | 90173 | A | INV#9206 | 177.00 |

| DEPARTMENT<br>NAME-OF-VENDOR | INVOICE-NO | S | DESCRIPTION-OF-INVOICE | AMOUNT |
|---|---|---|---|---|
| RDO EQUIPMENT | 90125 | A | INV#1802954 PCT 3 | 343,328.08 |
| DEPARTMENT TOTAL | | | | 356,965.24 |
| 0585-COUNTY INSPECTOR | | | | |
| AMAZON CAPITAL SERVICES, INC | 90144 | A | INV#1CXR-X7KH-1R6N ADDRESSING | 23.00 |
| CARD SERVICE CENTER | 90212 | A | 4707 1205 3610 0559 ROEDER | 100.00 |
| FUELMAN | 90201 | A | FUEL - INSPECTOR | 36.69 |
| DEPARTMENT TOTAL | | | | 159.69 |
| FUND TOTAL | | | | 484,388.47 |

| DEPARTMENT NAME-OF-VENDOR | INVOICE-NO | S | DESCRIPTION-OF-INVOICE | AMOUNT |
|---|---|---|---|---|
| 0540-R&B PCT #1 | | | | |
| ASPHALT PATCH ENT. INC. | 90063 | A | INV#845705 PCT 1 | 571.76 |
| FUELMAN | 90202 | A | FUEL - PCT 1 | 820.27 |
| N GLANTZ & SON | 90101 | A | INV#6647456-00 PCT 1 | 138.99 |
| ODIORNE FEED/RANCH SUPPLY INC | 90109 | A | INV#218693 PCT 1 | 120.00 |
| OUTLAW LUMBER & HARDWARE, LLC | 90179 | A | INV#132820 PCT 1 | 21.98 |
| THIRD COAST DISTRIBUTING, LLC | 90136 | A | INV#978739 PCT 1 | 27.67 |
| THIRD COAST DISTRIBUTING, LLC | 90137 | A | INV#979055 PCT 1 | 8.98 |
| THIRD COAST DISTRIBUTING, LLC | 90138 | A | INV#979430 PCT 1 | 36.98 |
| UNIFIRST CORPORATION | 90039 | A | ACCT #512256 PCT 1 | 262.39 |
| DEPARTMENT TOTAL | | | | 2,009.02 |
| 0550-R&B PCT #2 | | | | |
| BLANCO COUNTY TAX ASSESSOR-COLLECT | 90067 | A | LICENSE TAG #1199662 PCT 2 | 7.50 |
| FUELMAN | 90203 | A | FUEL - PCT 2 | 375.81 |
| N GLANTZ & SON | 90102 | A | INV#6647456-00 PCT 2 | 138.99 |
| ODIORNE FEED/RANCH SUPPLY INC | 90105 | A | INV#217403 PCT 2 | 219.99 |
| ODIORNE FEED/RANCH SUPPLY INC | 90106 | A | INV#482433 PCT 2 | 0.50 |
| THIRD COAST DISTRIBUTING, LLC | 90139 | A | INV#975285 PCT 2 | 15.49 |
| THIRD COAST DISTRIBUTING, LLC | 90193 | A | INV#978376 PCT 2 | 112.89 |
| THIRD COAST DISTRIBUTING, LLC | 90194 | A | INV#978542 PCT 2 | 149.97 |
| UNIFIRST CORPORATION | 90040 | A | ACCT #512256 PCT 2 | 84.88 |
| WILLIAMSON COUNTY EQUIPMENT CO | 90195 | A | INV#200-61559 PCT 2 | 905.32 |
| DEPARTMENT TOTAL | | | | 2,011.34 |
| 0560-R&B PCT #3 | | | | |
| CARD SERVICE CENTER | 90207 | A | 4707 1205 3610 0385 LIESMANN | 64.78 |
| ELLIOTT ELECTRIC SUPPLY | 90156 | A | INV#36-33831-01 PCT 3 | 1,394.66 |
| ELLIOTT ELECTRIC SUPPLY | 90157 | A | INV#36-34123-02, CR INV#36-33831-02 | 704.22 |
| FORD & CREW HOME AND HARDWARE | 90084 | A | INV#24533/1 PCT 3 | 130.62 |
| FORD & CREW HOME AND HARDWARE | 90085 | A | INV#24721/1 PCT 3 | 273.97 |
| FORD & CREW HOME AND HARDWARE | 90086 | A | INV#24745/1 PCT 3 | 24.96 |
| FORD & CREW HOME AND HARDWARE | 90159 | A | INV#24904/1 PCT 3 | 43.47 |
| FORD & CREW HOME AND HARDWARE | 90160 | A | INV#24922/1 PCT 3 | 1.99 |
| N GLANTZ & SON | 90103 | A | INV#6647456-00 PCT 3 | 138.99 |
| DEPARTMENT TOTAL | | | | 2,777.66 |
| 0570-R&B PCT #4 | | | | |
| BLANCO COUNTY TAX ASSESSOR-COLLECT | 90068 | A | LICENSE TAG #1415555 PCT 4 | 7.50 |
| CAMPBELL FUCHS | 90070 | A | INV#INV0142 PCT 4 | 3,900.00 |
| FUELMAN | 90204 | A | FUEL - PCT 4 | 853.92 |
| N GLANTZ & SON | 90104 | A | INV#6647456-00 PCT 4 | 139.00 |
| OUTLAW LUMBER & HARDWARE, LLC | 90113 | A | INV#132130 PCT 4 | 34.43 |
| OUTLAW LUMBER & HARDWARE, LLC | 90114 | A | INV#132385 PCT 4 | 55.96 |
| PETERSON TIRE | 90119 | A | INV#BL56501 PCT 4 | 7.00 |
| UNIFIRST CORPORATION | 90041 | A | ACCT #512256 PCT 4 | 167.07 |
| DEPARTMENT TOTAL | | | | 5,164.88 |
| FUND TOTAL | | | | 11,962.90 |

| DEPARTMENT NAME-OF-VENDOR | INVOICE-NO | S | DESCRIPTION-OF-INVOICE | AMOUNT |
|---|---|---|---|---|
| 0400-RECORDS MANAGEMENT CLERK EXPENSES | | | | |
| KOFILE TECHNOLOGIES, INC | 90018 | A | INV #KT-017971 CO CLERK | 571.00- |
| KOFILE TECHNOLOGIES, INC | 90017 | A | INV #KT-017971 CO CLERK | 1,946.25 |
| PPT | 90026 | A | INV #84959 CO CLERK | 13.66 |
| DEPARTMENT TOTAL | | | | 1,388.91 |
| FUND TOTAL | | | | 1,388.91 |

| DEPARTMENT NAME-OF-VENDOR | INVOICE-NO | S | DESCRIPTION-OF-INVOICE | AMOUNT |
|---|---|---|---|---|
| 0400-JP 4 TECHNOLOGY FUND EXPENSES | | | | |
| DELL MARKETING L.P. | 90072 | A | INV#10779348702 JP4 | 1,917.06 |
| DEPARTMENT TOTAL | | | | 1,917.06 |
| FUND TOTAL | | | | 1,917.06 |

| DEPARTMENT NAME-OF-VENDOR | INVOICE-NO | S | DESCRIPTION-OF-INVOICE | AMOUNT |
|---|---|---|---|---|
| 0400-ELECTON SERVICES EXPENSES | | | | |
| AMAZON CAPITAL SERVICES, INC | 90060 | A | INV#174P-MT6K-T9JK EA | 1,900.95 |
| DEPARTMENT TOTAL | | | | 1,900.95 |
| FUND TOTAL | | | | 1,900.95 |

| DEPARTMENT NAME-OF-VENDOR | INVOICE-NO | S | DESCRIPTION-OF-INVOICE | AMOUNT |
|---|---|---|---|---|
| 0400-JAIL INMATE COMMISSARY EXPENSES | | | | |
| AMAZON CAPITAL SERVICES, INC | 90056 | A | INV#1YR7-C3PH-KH4G LEC | 73.16 |
| CARD SERVICE CENTER | 90217 | A | 4707 1205 3610 9397 CO JUDGE | 93.94 |
| DEPARTMENT TOTAL | | | | 167.10 |
| FUND TOTAL | | | | 167.10 |

| DEPARTMENT NAME-OF-VENDOR | INVOICE-NO | S | DESCRIPTION-OF-INVOICE | AMOUNT |
|---|---|---|---|---|
| 0400-EXPENSES | | | | |
| KENDNEL KASPER CONSTURCTION | 90049 | A | APPL. #14 STAR FLIGHT | 450,212.68 |
| DEPARTMENT TOTAL | | | | 450,212.68 |
| FUND TOTAL | | | | 450,212.68 |

| DEPARTMENT<br>NAME-OF-VENDOR | INVOICE-NO | S | DESCRIPTION-OF-INVOICE | AMOUNT |
|---|---|---|---|---|
| GRAND TOTAL | | | | 951,938.07 |

# Blanco County Commissioners' Court

November 12, 2024

## Invoice File Listing By Fund to Ratify

| Fund | Description | Disbursement |
|---|---|---|
| 010 | General Fund | $ 75,246.10 |
| 015 | Road & Bridge Fund | $ 136.61 |
| 049 | Exhibit Hall | $ 764.32 |
| Total | | $ 76,147.03 |

The attached list of Claims Payable have been examined & approved for payment by the Assistant County Auditor as provided by the Texas LGC 113.064 & 113.065

Attest Asst. County Auditor: Mlatlyn Shield Date 11-7-24

The attached list of Claims Payable have been examined & approved for payment by the Commissioners' Court as provided by the Texas LGC 115.021 & 115.022

County Judge _____ Date _____

Commissioner Pct 1 _____ Commissioner Pct 3 _____

Commissioner Pct 2 _____ Commissioner Pct 4 _____

COPY

| DEPARTMENT NAME-OF-VENDOR | INVOICE-NO | S | DESCRIPTION-OF-INVOICE | AMOUNT |
|---|---|---|---|---|
| 0300-GENERAL FUND REVENUES | | | | |
| STATE COMPRTOLLER | 89964 | R | 1-74-6001460-2 CIVIL FEES | 6,457.70 |
| STATE COMPRTOLLER | 89965 | R | 1-74-6001460-2 SEXUAL ASSAULT | 25.00 |
| STATE COMPRTOLLER | 89966 | R | 1-74-6001460-2 SPECIALTY COURT | 9.24 |
| STATE COMPRTOLLER | 89967 | R | 1-74-6001460-2 ELECTRONIC | 26.28 |
| STATE COMPRTOLLER | 89968 | R | 1-74-6001460-2 CRIMINAL FEES | 54,068.56 |
| STATE COMPRTOLLER | 89969 | R | 1-74-6001460-2 CHID SAFETY SEAT | 25.00 |
| TEXAS ASSOCIATION OF COUNTIES | 89993 | R | NEWMAN & LOVING INSURANCE COBRA | 3,202.26 |
| DEPARTMENT TOTAL | | | | 63,814.04 |
| 0411-ELECTIONS ADMINISTRATOR | | | | |
| VERIZON WIRELESS | 89985 | R | INV #9977021462 ELECTIONS | 292.05 |
| DEPARTMENT TOTAL | | | | 292.05 |
| 0425-COUNTY SHERIFF | | | | |
| A T & T MOBILITY | 89995 | R | INV #287289997662X10272024 LEC | 20.59 |
| CITY OF JOHNSON CITY | 90000 | R | ACCT #09-1761-01 LEC | 1,609.42 |
| CITY OF JOHNSON CITY | 90001 | R | ACCT #09-1760-01 LEC | 491.51 |
| CITY OF JOHNSON CITY | 90002 | R | ACCT #09-1762-01 LEC | 54.74 |
| VERIZON WIRELESS | 89992 | R | INV #9977063798 LEC | 2,629.52 |
| DEPARTMENT TOTAL | | | | 4,805.78 |
| 0440-COUNTY EXTENSION AGENCY | | | | |
| AIDEN FULTON | 89982 | R | FERAL HOG ABATEMENT | 100.00 |
| CHAWA PEARSON | 89981 | R | FERAL HOG ABATEMENT | 590.00 |
| DEPARTMENT TOTAL | | | | 690.00 |
| 0445-EMERGENCY MANAGEMENT | | | | |
| A T & T MOBILITY | 89994 | R | INV #287289997662X10272024 EM | 31.35 |
| VERIZON WIRELESS | 89991 | R | INV #9977063798 EM | 86.50 |
| DEPARTMENT TOTAL | | | | 117.85 |
| 0450-JUDICIAL EXPENSES | | | | |
| BLANCO COUNTY DISTRICT CLERK | 89983 | R | GRAND JURY PAY 11-6-2024 | 780.00 |
| DEPARTMENT TOTAL | | | | 780.00 |
| 0500-COURTHOUSE EXPENSES | | | | |
| CANON FINANCIAL SERVICES, INC. | 89963 | R | INV #35865816 LEC | 37.92 |
| CITY OF BLANCO | 89978 | R | ACCT #04-0016-00 SOUTH ANNEX | 147.79 |
| CITY OF JOHNSON CITY | 89996 | R | ACCT #01-1759-01 ANNEX | 54.74 |
| CITY OF JOHNSON CITY | 89997 | R | ACCT #01-1758.01 ANNEX | 80.57 |
| CITY OF JOHNSON CITY | 89998 | R | ACCT #01-1757-01 PCT 2 | 197.58 |
| CITY OF JOHNSON CITY | 89999 | R | ACCT #01-1756-01 COURTHOUSE | 197.58 |
| HILL COUNTRY WIRELESS & TECHNOLOGY | 89970 | R | INV #4235-20241020-1 OLD JAIL | 25.00 |
| HILL COUNTRY WIRELESS & TECHNOLOGY | 89971 | R | INV #4450-20241020-1 RECYCLE | 25.00 |
| HILL COUNTRY WIRELESS & TECHNOLOGY | 89972 | R | INV #1040-20241020-1 ADULT PROBATIO | 50.00 |
| HILL COUNTRY WIRELESS & TECHNOLOGY | 89973 | R | INV #2492-20241020-1 ELECTIONS | 50.00 |
| HILL COUNTRY WIRELESS & TECHNOLOGY | 89974 | R | INV #3406-20241020-1 PCT 2 | 25.00 |
| PITNEY BOWES BANK INC. | 89976 | R | ACCT #8000-9090-0697-9400 POSTAGE | 1,000.00 |
| VERIZON WIRELESS | 89988 | R | INV #9977063798 FM | 40.23 |
| VERTICAL BRIDGE S3 ASSETS, LLC | 89977 | R | INV #00957826 NOVEMBER 2024 | 1,752.10 |
| DEPARTMENT TOTAL | | | | 3,683.51 |
| 0505-MAINTENANCE DEPARTMENT | | | | |
| VERIZON WIRELESS | 89987 | R | INV #9977063798 MAINTENANCE | 40.23 |
| DEPARTMENT TOTAL | | | | 40.23 |
| 0520-JUSTICE OF THE PEACE #4 | | | | |

| DEPARTMENT NAME-OF-VENDOR | INVOICE-NO | S | DESCRIPTION-OF-INVOICE | AMOUNT |
|---|---|---|---|---|
| DELL MARKETING L.P. | 89980 | R | INV #10778888022 | 933.90 |
| DEPARTMENT TOTAL | | | | 933.90 |
| 0525-CONSTABLE PCT #1 | | | | |
| VERIZON WIRELESS | 89989 | R | INV #9977063798 CONSTABLE #1 | 27.72 |
| DEPARTMENT TOTAL | | | | 27.72 |
| 0530-CONSTABLE PCT #4 | | | | |
| VERIZON WIRELESS | 89990 | R | INV #9977063798 CONSTABLE #4 | 20.79 |
| DEPARTMENT TOTAL | | | | 20.79 |
| 0545-VERTERAN SERVICES | | | | |
| VERIZON WIRELESS | 89986 | R | INV #9977063798 VA | 40.23 |
| DEPARTMENT TOTAL | | | | 40.23 |
| FUND TOTAL | | | | 75,246.10 |

| DEPARTMENT NAME-OF-VENDOR | INVOICE-NO | S | DESCRIPTION-OF-INVOICE | AMOUNT |
|---|---|---|---|---|
| 0560-R&B PCT #3 | | | | |
| FRONTIER COMMUNICATIONS | 89984 | R | 830-825-3270 PCT 3 | 136.61 |
| DEPARTMENT TOTAL | | | | 136.61 |
| FUND TOTAL | | | | 136.61 |

| DEPARTMENT NAME-OF-VENDOR | INVOICE-NO | S | DESCRIPTION-OF-INVOICE | AMOUNT |
|---|---|---|---|---|
| 0400-EXPENSES | | | | |
| CITY OF JOHNSON CITY | 90003 | R | ACCT #01-2011-01 EXHIBIT HALL | 68.75 |
| HILL COUNTRY WIRELESS & TECHNOLOGY | 89975 | R | INV #4175-20241020-01 FAIR GROUNDS | 50.00 |
| PEDERNALES ELECTRIC COOP | 89979 | R | ACCT #3001577088 FAIR GROUNDS | 645.57 |
| DEPARTMENT TOTAL | | | | 764.32 |
| FUND TOTAL | | | | 764.32 |

| DEPARTMENT | NAME-OF-VENDOR | INVOICE-NO | S | DESCRIPTION-OF-INVOICE | AMOUNT |
|---|---|---|---|---|---|
| | GRAND TOTAL | | | | 76,147.03 |

**BLANCO COUNTY**
**PROPOSED HOLIDAY SCHEDULE FOR 2025**

| | |
|---|---|
| Wednesday, January 1 | New Year's Day |
| Monday, January 20 | Martin Luther King Jr. Day |
| Monday, February 17 | Presidents' Day |
| Friday, April 18 | Good Friday |
| Monday, May 26 | Memorial Day |
| Friday, July 4 | Independence Day |
| Monday, September 1 | Labor Day |
| Monday, October 13 | Columbus Day |
| Tuesday, November 11 | Veteran's Day |
| Thursday, November 27 | Thanksgiving Day |
| Friday, November 28 | Day after Thanksgiving |
| Wednesday, December 24 | Christmas Eve |
| Thursday, December 25 | Christmas Day |

This schedule gives employees a total of one (1) floating holiday in addition to the above schedule.

Proposed Twice A Month
2025 Drop-Off Dates
for New Subdivision Applications

| | Drop off dates by appointment only | | Commissioners' Court Date |
|---|---|---|---|
| x | December 29, 30, 31<br>Revised to January **1**, 2, 3 | | 28 January, 2025 |
| | January 13, 14, 15 | | 11 February, 2025 |
| | January 27, 28, 29 | | 25 February, 2025 |
| | February 10, 11, 12 | | 11 March, 2025 |
| | February 24, 25, 26 | | 25 March, 2025 |
| | March 10, 11, 12 | | 8 April, 2025 |
| | March 24, 25, 26 | | 22 April, 2025 |
| | April 14, 15, 16 | | 13 May, 2025 |
| | April 28, 29, 30 | | 27 May, 2025 |
| | May 12, 13, 14 | | 10 June, 2025 |
| | May **26**, 27, 28 | | 24 June, 2025 |
| | June 9, 10, 11 | | 8 July, 2025 |
| | June 23, 24, 25 | | 22 July, 2025 |
| | July 14, 15, 16 | | 12 August, 2025 |
| | July 28, 29, 30 | | 26 August, 2025 |
| | August 11, 12, 13 | | 9 September, 2025 |
| | August 24, 25, 26 | | 23 September, 2025 |
| | September 15, 16, 17 | | 14 October, 2025 |
| | September 29, 30, Oct 1 | | 28 October, 2025 |
| | October **13**, 14, 15 | | 11 November, 2025 |
| | October 27, 28, 29 | | 25 November, 2025 |
| | November 10, **11**, 12 | | 9 December, 2025 |

* color red denotes holiday/weekend

MOTOROLA SOLUTIONS

QUOTE-2825994

Billing Address:
BLANCO COUNTY SHERIFFS
DEPT
P O BOX 365
JOHNSON CITY, TX 78636
US

Quote Date:10/01/2024
Expiration Date:12/30/2024
Quote Created By:
Daniel Howard
Dan.Howard1@
motorolasolutions.com

End Customer:
BLANCO COUNTY SHERIFFS DEPT

Contract: 17212 - CITY OF AUSTIN (TX)

| Line # | Item Number | Description | Qty | List Price | Sale Price | Ext. Sale Price |
|---|---|---|---|---|---|---|
| | APX™ 6000 Series | APX6000 | | | | |
| 1 | H98KGH9PW7BN | APX6000 VHF MHZ MODEL 3.5 PORTABLE | 3 | $4,104.00 | $2,790.72 | $8,372.16 |
| 1a | QA01648AA | ADD: HW KEY SUPPLEMENTAL DATA | 3 | $6.00 | $4.08 | $12.24 |
| 1b | QA01767AT | ADD: P25 LINK LAYER AUTHENTICATION | 3 | $110.00 | $74.80 | $224.40 |
| 1c | Q361AR | ADD: P25 9600 BAUD TRUNKING | 3 | $330.00 | $224.40 | $673.20 |
| 1d | Q173AZ | ADD: SMARTZONE OMNILINK | 3 | $220.00 | $149.60 | $448.80 |
| 1e | QA00580AC | ADD: TDMA OPERATION | 3 | $495.00 | $336.60 | $1,009.80 |
| 1f | Q887AU | ADD: 5Y ESSENTIAL SERVICE | 3 | $306.00 | $306.00 | $918.00 |
| 1g | QA09006AA | ADD: ADAPTIVE NOISE SUPPRESSION | 3 | $165.00 | $112.20 | $336.60 |
| 1h | H38BT | ADD: SMARTZONE OPERATION | 3 | $1,320.00 | $897.60 | $2,692.80 |
| 1i | QA09113AB | ADD: BASELINE RELEASE SW | 3 | $0.00 | $0.00 | $0.00 |
| 1j | Q806BM | ADD: ASTRO DIGITAL CAI OPERATION | 3 | $567.00 | $385.56 | $1,156.68 |
| 1k | Q667BB | ADD: ADP ONLY (NON-P25 CAP COMPLIANT) (US ONLY) | 3 | $0.00 | $0.00 | $0.00 |
| 2 | NNTN8860B | CHARGER, SINGLE-UNIT, IMPRES 2, 3A, 115VAC, US/NA | 3 | $186.50 | $139.88 | $419.64 |

Grand Total $16,264.32(USD)

Any sales transaction following Motorola's quote is based on and subject to the terms and conditions of the valid and executed written contract between Customer and Motorola (the ""Underlying Agreement"") that authorizes Customer to purchase equipment and/or services or license software (collectively ""Products""). If no Underlying Agreement exists between Motorola and Customer, then Motorola's Standard Terms of Use and Motorola's Standard Terms and Conditions of Sales and Supply shall govern the purchase of the Products.
Motorola Solutions, Inc.: 500 West Monroe, United States - 60661 ~ #: 36-1115800

## Notes:

- Unless otherwise noted, this quote excludes sales tax or other applicable taxes (such as Goods and Services Tax, sales tax, Value Added Tax and other taxes of a similar nature). Any tax the customer is subject to will be added to invoices.

Any sales transaction following Motorola's quote is based on and subject to the terms and conditions of the valid and executed written contract between Customer and Motorola (the ""Underlying Agreement"") that authorizes Customer to purchase equipment and/or services or license software (collectively ""Products""). If no Underlying Agreement exists between Motorola and Customer, then Motorola's Standard Terms of Use and Motorola's Standard Terms and Conditions of Sales and Supply shall govern the purchase of the Products.

Motorola Solutions, Inc.: 500 West Monroe, United States - 60661 ~ #: 36-1115800

MOTOROLA SOLUTIONS

QUOTE-2826003

Billing Address:
BLANCO COUNTY SHERIFFS
DEPT
P O BOX 365
JOHNSON CITY, TX 78636
US

Quote Date:10/01/2024
Expiration Date:12/30/2024
Quote Created By:
Daniel Howard
Dan.Howard1@
motorolasolutions.com

End Customer:
BLANCO COUNTY SHERIFFS DEPT

Contract: 22918 - TX DIR TSO-4101

| Line # | Item Number | Description | Qty | List Price | Sale Price | Ext. Sale Price |
|---|---|---|---|---|---|---|
| | APX™ 6500 / Enh Series | ENHANCEDAPX6500 | | | | |
| 1 | M25KSS9PW1BN | APX6500 ENHANCED VHF MOBILE | 3 | $3,383.12 | $2,469.68 | $7,409.04 |
| 1a | QA01648AA | ADD: HW KEY SUPPLEMENTAL DATA | 3 | $6.00 | $4.38 | $13.14 |
| 1b | GA00318AF | ENH: 5 YEAR ESSENTIAL SVC | 3 | $480.00 | $480.00 | $1,440.00 |
| 1c | G831AD | ADD: SPKR 15W WATER RESISTANT | 3 | $66.00 | $48.18 | $144.54 |
| 1d | GA00580AA | ADD: TDMA OPERATION | 3 | $495.00 | $361.35 | $1,084.05 |
| 1e | G629AB | ADD:1/4 WAVE BROADBAND ANT 146-174 | 3 | $70.00 | $51.10 | $153.30 |
| 1f | G51AU | ENH: SMARTZONE OPERATION APX6500 | 3 | $1,320.00 | $963.60 | $2,890.80 |
| 1g | G67DT | ADD: REMOTE MOUNT E5 APXM | 3 | $327.00 | $238.71 | $716.13 |
| 1h | W12DK | ADD: RF PREAMP APX | 3 | $73.00 | $53.29 | $159.87 |
| 1i | GA01606AA | ADD: NO BLUETOOTH/ WIFI/GPS ANTENNA NEEDED | 3 | $0.00 | $0.00 | $0.00 |
| 1j | G444AH | ADD: APX CONTROL HEAD SOFTWARE | 3 | $0.00 | $0.00 | $0.00 |
| 1k | G806BL | ENH: ASTRO DIGITAL CAI OP APX | 3 | $567.00 | $413.91 | $1,241.73 |
| 1l | GA01767AG | ADD: RADIO AUTHENTICATION | 3 | $110.00 | $80.30 | $240.90 |
| 1m | GA01670AA | ADD: APX E5 CONTROL HEAD | 3 | $717.00 | $523.41 | $1,570.23 |

Any sales transaction following Motorola's quote is based on and subject to the terms and conditions of the valid and executed written contract between Customer and Motorola (the ""Underlying Agreement"") that authorizes Customer to purchase equipment and/or services or license software (collectively ""Products""). If no Underlying Agreement exists between Motorola and Customer, then Motorola's Standard Terms of Use and Motorola's Standard Terms and Conditions of Sales and Supply shall govern the purchase of the Products.
Motorola Solutions, Inc.: 500 West Monroe, United States - 60661 ~ #: 36-1115800

| Line # | Item Number | Description | Qty | List Price | Sale Price | Ext. Sale Price |
|---|---|---|---|---|---|---|
| 1n | W22BA | ADD: STD PALM MICROPHONE APX | 3 | $79.00 | $57.67 | $173.01 |
| 1o | QA09113AB | ADD: BASELINE RELEASE SW | 3 | $0.00 | $0.00 | $0.00 |
| 1p | G361AH | ENH: P25 TRUNKING SOFTWARE APX | 3 | $330.00 | $240.90 | $722.70 |
| 1q | G193AK | ADD: ADP ONLY (NON-P25 CAP COMPLIANT) (US ONLY) | 3 | $0.00 | $0.00 | $0.00 |

Grand Total $17,959.44(USD)

## Notes:

- Unless otherwise noted, this quote excludes sales tax or other applicable taxes (such as Goods and Services Tax, sales tax, Value Added Tax and other taxes of a similar nature). Any tax the customer is subject to will be added to invoices.

Any sales transaction following Motorola's quote is based on and subject to the terms and conditions of the valid and executed written contract between Customer and Motorola (the ""Underlying Agreement"") that authorizes Customer to purchase equipment and/or services or license software (collectively ""Products""). If no Underlying Agreement exists between Motorola and Customer, then Motorola's Standard Terms of Use and Motorola's Standard Terms and Conditions of Sales and Supply shall govern the purchase of the Products.

Motorola Solutions, Inc.: 500 West Monroe, United States - 60661 ~ #: 36-1115800

# PRODUCT PRICING SUMMARY

**TIPS USA 210907 AUTOMOBILES**

**VENDOR- Silsbee Ford, 1211 Hwy 96 N., Silsbee TX 77656**

**End User:** BLANCO COUNTY SLICK TOP
**Contact:**
**Email:**
**Product Description:** FORD POLICE INTERCEPTOR UTILITY

**Prepared by:** SETH GAMBLIN
**Phone:** 512.436.1313
**Email:** SGAMBLIN.SILSBEEFLEET@GMAIL.COM
**Date:** November 1, 2024

**A.** **Bid Item:**

**A. Base Price:** $ 48,395.00

**B. Factory Options**

| Code | Description | Bid Price | Code | Description | Bid Price |
|---|---|---|---|---|---|
| K8A | 2025 FORD PIU | $ 1,995.00 | | | |
| 99B | 3.3L V6 DIRECT-INJECTION ENGINE | $ - | | | |
| 86T | TAIL LAMP/POLICE HOUSING | $ 60.00 | | | |
| 17A | AUX AIR | $ 610.00 | | | |
| 55F | KEY FOB 6 totsl | $ 340.00 | | | |
| 60A | GRILLE LIGHTS, SIREN, SPEAKER WIRING | $ 50.00 | | | |
| 61B | OBD-II SPLITTER | $ 55.00 | | | |
| 51R | DRIVER SIDE SPOT LED | $ 395.00 | | | |

**Total of B. Published Options:** $ 3,505.00

**Published Option Discount (5%)** $ (75.50)

COPY

**C. Unpublished Options**

$= 39.2 %

| Description | Bid Price | Options | Bid Price |
|---|---|---|---|
| | | EXTERIOR- WHITE | |
| | | INTERIOR- 96 | |
| DANA INSTALL 552606 | $ 20,360.24 | | |
| | | | |
| | | UITS ON ORDER ** | |
| | | | |
| | | ETA TO US EARLY NOV 2024 | |
| | | | |
| | | | |

**Total of C. Unpublished Options:** $ 20,360.24

**D.** **Floor Plan Interest (for in-stock and/or equipped vehicles):** $ -

**E.** **Lot Insurance (for in-stock and/or equipped vehicles):** $ -

**F.** **Contract Price Adjustment:**

**G.** **Additional Delivery Charge:** 250 — $ 437.50

**H.** **Subtotal:** $ 72,622.24

**I.** **Quantity Ordered** 1 **x H =** $ 72,622.24

**J.** **Trade in:**

**K.**

**L.** **Total Purchase Price** $ 72,622.24

**DANA SAFETY SUPPLY, INC**
**4809 KOGER BLVD**
**GREENSBORO, NC 27407**

# Sales Quote

**Telephone:** 800-845-0405

| | |
|---|---|
| **Sales Quote No.** | 552606 |
| **Customer No.** | SILSBEE |

**Bill To**

SILSBEE FORD FLEET GROUP
**NEED ONLY ONE INVOICE PER SO#**
**NEED ONLY ONE INVOICE PER SO#**
SILSBEE, TX 77656

**Contact:** SETH GAMBLIN
**Telephone:** 512-436-1313
**E-mail:** sgamblinsilsbeefleet@gmail.com

**Ship To**

(For Pickup)
ROUND ROCK WAREHOUSE
900 E. OLD SETTLERS BLVD
Bldg 4 Ste 400
ROUND ROCK, TX 78664

**Contact:** Braydon Joslin
**Telephone:** 512-781-4135
**E-mail:** bjoslin@danasafetysupply.com

| Quote Date | Ship Via | F.O.B. | Customer PO Number | Payment Method |
|---|---|---|---|---|
| 11/01/24 | GROUND FREIGHT NON | QUOTED FREIGHT | | NET30 |

| Entered By | Salesperson | Ordered By | Resale Number |
|---|---|---|---|
| Braydon Joslin | BRAYDON JOSLIN ROUND | Chief Woodring | 17605331440 |

| Order Quantity | Approve Quantity | Tax | Item Number / Description | Unit Price | Extended Price |
|---|---|---|---|---|---|
| 1 | 1 | N | INFO<br>BLANCO CSO 2025 FORD PIU WHITE - SLICK TOP x1<br>Warehouse: RROC | 0.0000 | 0.00 |
| 1 | 1 | N | INFO<br>FRONT OF VEHICLE<br>Warehouse: RROC | 0.0000 | 0.00 |
| 1 | 1 | Y | 36-2125<br>WESTIN 2025 FORD PI UTILITY PUSH BUMPER<br>Warehouse: RROC | 328.0000 | 328.00 |
| 1 | 1 | Y | 36-2125W<br>WESTIN 2025 FORD PI UTILITY UPPER WINGS<br>Warehouse: RROC | 206.4100 | 206.41 |
| 1 | 1 | Y | 36-2125PB<br>WESTIN 2025 FORD PI UTILITY PIT BAR<br>Warehouse: RROC | 298.0000 | 298.00 |
| 1 | 1 | Y | 36-6005SMP4<br>Westin Elite 23.5" 4-Light Channel mpower HD<br>Warehouse: RROC | 38.0000 | 38.00 |
| 1 | 1 | Y | 36-2125WC<br>WESTIN WIRE COVER FOR PB<br>Warehouse: RROC | 38.0000 | 38.00 |

| | |
|---|---|
| **Print Date** | 11/01/24 |
| **Print Time** | 04:14:32 PM |
| **Page No.** | 1 |

Printed By: Braydon Joslin

**Continued on Next Page**

# Sales Quote

**DANA SAFETY SUPPLY, INC**
**4809 KOGER BLVD**
**GREENSBORO, NC 27407**

**Telephone:** 800-845-0405

| | |
|---|---|
| **Sales Quote No.** | 552606 |
| **Customer No.** | SILSBEE |

**Bill To**

SILSBEE FORD FLEET GROUP
**NEED ONLY ONE INVOICE PER SO#**
**NEED ONLY ONE INVOICE PER SO#**
SILSBEE, TX 77656

**Contact:** SETH GAMBLIN
**Telephone:** 512-436-1313
**E-mail:** sgamblinsilsbeefleet@gmail.com

**Ship To**

(For Pickup)
ROUND ROCK WAREHOUSE
900 E. OLD SETTLERS BLVD
Bldg 4 Ste 400
ROUND ROCK, TX 78664

**Contact:** Braydon Joslin
**Telephone:** 512-781-4135
**E-mail:** bjoslin@danasafetysupply.com

| Quote Date | Ship Via | F.O.B. | Customer PO Number | Payment Method |
|---|---|---|---|---|
| 11/01/24 | GROUND FREIGHT NON | QUOTED FREIGHT | | NET30 |

| Entered By | Salesperson | Ordered By | Resale Number |
|---|---|---|---|
| Braydon Joslin | BRAYDON JOSLIN ROUND | Chief Woodring | 17605331440 |

| Order Quantity | Approve Quantity | Tax | Item Number / Description | Unit Price | Extended Price |
|---|---|---|---|---|---|
| 4 | 4 | Y | EMPS4STS5RBW<br>SOI, MPWR HD, 4", STM, CLR HSG, RED/BLU/WHT<br>Warehouse: RROC<br>4 in Each Top Channel PB | 126.9300 | 507.72 |
| 2 | 2 | Y | EMPS2SMS5RBW<br>SOI, MPWR FASCIA, 4", SM, BLK HSG, RED/BLU/WHT<br>Warehouse: RROC<br>1 on Each Side of PB with Bezel | 126.9300 | 253.86 |
| 2 | 2 | Y | PMPSABZ01B<br>SOI 4" MPOWER METAL BLACK BEZEL<br>Warehouse: RROC | 11.0000 | 22.00 |
| 1 | 1 | Y | ELUC3H010E<br>SOI UNIV UNDERCOVER LED INSERT, 5 WIRE BLUE/WHITE<br>Warehouse: RROC | 77.4700 | 77.47 |
| 1 | 1 | Y | ELUC3H010D<br>SOI UNIV UNDERCOVER LED INSERT, 5 WIRE RED/WHITE<br>Warehouse: RROC | 77.4700 | 77.47 |
| 1 | 1 | Y | ETSS100J<br>SOI 100J SERIES COMPOSITE SPEAKER<br>Warehouse: RROC<br>100J series composite speaker w/ universal bail brkt-100 watt | 183.0000 | 183.00 |

| | |
|---|---|
| **Print Date** | 11/01/24 |
| **Print Time** | 04:14:32 PM |
| **Page No.** | 2 |

Printed By: Braydon Joslin

**Continued on Next Page**

**DANA SAFETY SUPPLY, INC**
**4809 KOGER BLVD**
**GREENSBORO, NC 27407**

**Telephone:** 800-845-0405

# Sales Quote

| | |
|---|---|
| **Sales Quote No.** | 552606 |
| **Customer No.** | SILSBEE |

**Bill To**

SILSBEE FORD FLEET GROUP
**NEED ONLY ONE INVOICE PER SO#**
**NEED ONLY ONE INVOICE PER SO#**
SILSBEE, TX 77656

**Contact:** SETH GAMBLIN
**Telephone:** 512-436-1313
**E-mail:** sgamblinsilsbeefleet@gmail.com

**Ship To**

(For Pickup)
ROUND ROCK WAREHOUSE
900 E. OLD SETTLERS BLVD
Bldg 4 Ste 400
ROUND ROCK, TX 78664

**Contact:** Braydon Joslin
**Telephone:** 512-781-4135
**E-mail:** bjoslin@danasafetysupply.com

| Quote Date | Ship Via | F.O.B. | Customer PO Number | Payment Method |
|---|---|---|---|---|
| 11/01/24 | GROUND FREIGHT NON | QUOTED FREIGHT | | NET30 |

| Entered By | Salesperson | Ordered By | Resale Number |
|---|---|---|---|
| Braydon Joslin | BRAYDON JOSLIN ROUND | Chief Woodring | 17605331440 |

| Order Quantity | Approve Quantity | Tax | Item Number / Description | Unit Price | Extended Price |
|---|---|---|---|---|---|
| 1 | 1 | Y | ENFWB01EFZ<br>SOI, NFLIB, FRNT, 6MOD, 2020-23 PIU W/O76P, RW/BW<br>Warehouse: RROC<br>Ford Explorer/PI Utility w/ Option 76P (2020-23) Split Front<br>(DRV) \|D12\|\|D12\|\|D12\|\|D12\|\|D12\|\|D12\| (PAS)<br>\|R_W\|\|R_W\|\|R_W\|\|B_W\|\|B_W\|\|B_W\|<br>Accessories: PNFLBSPLT1<br>DSC w/ LIN Breakout Box (Included) | 763.4700 | 763.47 |
| 1 | 1 | N | INFO<br>SIDE OF VEHICLE<br>Warehouse: RROC | 0.0000 | 0.00 |
| 2 | 2 | Y | ENT3B3RBW<br>SOI INTERSECTOR 18-LED SFC MNT,BLK HSG<br>RED/BLUE/WHITE<br>Warehouse: RROC | 173.6000 | 347.20 |
| 1 | 1 | Y | PMP2BKUMB8-P<br>SOI UNDER MIRROR MOUNT BRACKET KIT, PASS., 2025 PIU<br>Warehouse: RROC | 25.0000 | 25.00 |
| 1 | 1 | Y | PMP2BKUMB8-D<br>SOI UNDER MIRROR MOUNT BRACKET KIT, DRIVER, 2025<br>Warehouse: RROC | 25.0000 | 25.00 |

| | |
|---|---|
| **Print Date** | 11/01/24 |
| **Print Time** | 04:14:32 PM |
| **Page No.** | 3 |

Printed By: Braydon Joslin

**Continued on Next Page**

# Sales Quote

**DANA SAFETY SUPPLY, INC**
**4809 KOGER BLVD**
**GREENSBORO, NC 27407**

**Telephone:** 800-845-0405

| | |
|---|---|
| **Sales Quote No.** | 552606 |
| **Customer No.** | SILSBEE |

**Bill To**

SILSBEE FORD FLEET GROUP
**NEED ONLY ONE INVOICE PER SO#**
**NEED ONLY ONE INVOICE PER SO#**
SILSBEE, TX 77656

**Contact:** SETH GAMBLIN
**Telephone:** 512-436-1313
**E-mail:** sgamblinsilsbeefleet@gmail.com

**Ship To**

(For Pickup)
ROUND ROCK WAREHOUSE
900 E. OLD SETTLERS BLVD
Bldg 4 Ste 400
ROUND ROCK, TX 78664

**Contact:** Braydon Joslin
**Telephone:** 512-781-4135
**E-mail:** bjoslin@danasafetysupply.com

| Quote Date | Ship Via | F.O.B. | Customer PO Number | Payment Method |
|---|---|---|---|---|
| 11/01/24 | GROUND FREIGHT NON | QUOTED FREIGHT | | NET30 |

| Entered By | Salesperson | Ordered By | Resale Number |
|---|---|---|---|
| Braydon Joslin | BRAYDON JOSLIN ROUND | Chief Woodring | 17605331440 |

| Order Quantity | Approve Quantity | Tax | Item Number / Description | Unit Price | Extended Price |
|---|---|---|---|---|---|
| 4 | 4 | Y | EMPS2STS5RBW<br>SOI, MPWR FASCIA, 4", STM, BLK HSG, RED/BLU/WHT<br>Warehouse: RROC<br>2 in Each Cargo Window Shroud (4 Total per Unit) | 126.9300 | 507.72 |
| 2 | 2 | Y | PMP2WSDDB<br>SOI 4" MPOWER DUAL WINDOW SHROUD-BLACK<br>Warehouse: RROC | 18.0000 | 36.00 |
| 1 | 1 | N | INFO<br>REAR OF VEHICLE<br>Warehouse: RROC | 0.0000 | 0.00 |
| 1 | 1 | Y | ENFWB01EP2<br>SOI, NFILB, REAR, 6MOD, 2020-23 PIU, RA/BA<br>Warehouse: RROC<br>ENFWB01EP2<br>Ford Explorer/PI Utility w/ Option 76P (2020-23) Solid Rear<br>(DRV) \|D12\|\|D12\|\|D12\|\|D12\|\|D12\|\|D12\| (PAS)<br>\|R_A\|\|R_A\|\|R_A\|\|B_A\|\|B_A\|\|B_A\|<br>Accessories: PNFLBSPLT1<br>DSC w/ LIN Breakout Box (Included) | 763.4700 | 763.47 |
| 2 | 2 | Y | EMPS2QMS5RBW<br>SOI, MPWR FASCIA, 4", QM, BLK HSG, RED/BLU/WHT<br>Warehouse: RROC<br>Vertically Mounted on sides of License Plate<br>*Steady White Reverse* | 126.9300 | 253.86 |

| | |
|---|---|
| **Print Date** | 11/01/24 |
| **Print Time** | 04:14:32 PM |
| **Page No.** | 4 |

Printed By: Braydon Joslin

**Continued on Next Page**

**DANA SAFETY SUPPLY, INC**
**4809 KOGER BLVD**
**GREENSBORO, NC 27407**

# Sales Quote

**Telephone:** 800-845-0405

| | |
|---|---|
| **Sales Quote No.** | 552606 |
| **Customer No.** | SILSBEE |

**Bill To**

SILSBEE FORD FLEET GROUP
**NEED ONLY ONE INVOICE PER SO#**
**NEED ONLY ONE INVOICE PER SO#**
SILSBEE, TX 77656

**Contact:** SETH GAMBLIN
**Telephone:** 512-436-1313
**E-mail:** sgamblinsilsbeefleet@gmail.com

**Ship To**

(For Pickup)
ROUND ROCK WAREHOUSE
900 E. OLD SETTLERS BLVD
Bldg 4 Ste 400
ROUND ROCK, TX 78664

**Contact:** Braydon Joslin
**Telephone:** 512-781-4135
**E-mail:** bjoslin@danasafetysupply.com

| Quote Date | Ship Via | F.O.B. | Customer PO Number | Payment Method |
|---|---|---|---|---|
| 11/01/24 | GROUND FREIGHT NON | QUOTED FREIGHT | | NET30 |

| Entered By | Salesperson | Ordered By | Resale Number |
|---|---|---|---|
| Braydon Joslin | BRAYDON JOSLIN ROUND | Chief Woodring | 17605331440 |

| Order Quantity | Approve Quantity | Tax | Item Number / Description | Unit Price | Extended Price |
|---|---|---|---|---|---|
| 1 | 1 | Y | ELUC3H010D<br>SOI UNIV UNDERCOVER LED INSERT, 5 WIRE RED/WHITE<br>Warehouse: RROC<br>Driver Side Tail light Housing | 77.4700 | 77.47 |
| 1 | 1 | Y | ELUC3H010E<br>SOI UNIV UNDERCOVER LED INSERT, 5 WIRE BLUE/WHITE<br>Warehouse: RROC<br>Passenger Side Tail light Housing | 77.4700 | 77.47 |
| 2 | 2 | Y | EMPS2QMS5RBW<br>SOI, MPWR FASCIA, 4", QM, BLK HSG, RED/BLU/WHT<br>Warehouse: RROC<br>Mount 2 under Hatch Inside for Rear Lighting | 126.9300 | 253.86 |
| 1 | 1 | N | INFO<br>INTERIOR OF VEHICLE<br>Warehouse: RROC | 0.0000 | 0.00 |
| 1 | 1 | Y | MISC<br>HAVIS PKG-VSX-1800-INUT-PM-5 CONSOLE PACKAGE<br>Warehouse: RROC<br>Front PocketJet 8 Printer Mount for Laptop Docking Stations for 2020-2025 Ford Interceptor Utility<br>*Includes Cup Holders, Printer Armrest, & Motion Device* | 1,146.6700 | 1,146.67 |
| 1 | 1 | Y | CUP2-1001<br>HAV Self-Adjusting Double Cup Holder<br>Warehouse: RROC | 44.6700 | 44.67 |

| | |
|---|---|
| **Print Date** | 11/01/24 |
| **Print Time** | 04:14:32 PM |
| **Page No.** | 5 |

Printed By: Braydon Joslin

**Continued on Next Page**

# Sales Quote

**DANA SAFETY SUPPLY, INC**
**4809 KOGER BLVD**
**GREENSBORO, NC 27407**

**Telephone:** 800-845-0405

| | |
|---|---|
| **Sales Quote No.** | 552606 |
| **Customer No.** | SILSBEE |

| Bill To | Ship To |
|---|---|
| SILSBEE FORD FLEET GROUP<br>**NEED ONLY ONE INVOICE PER SO#**<br>**NEED ONLY ONE INVOICE PER SO#**<br>SILSBEE, TX 77656 | (For Pickup)<br>ROUND ROCK WAREHOUSE<br>900 E. OLD SETTLERS BLVD<br>Bldg 4 Ste 400<br>ROUND ROCK, TX 78664 |
| **Contact:** SETH GAMBLIN<br>**Telephone:** 512-436-1313<br>**E-mail:** sgamblinsilsbeefleet@gmail.com | **Contact:** Braydon Joslin<br>**Telephone:** 512-781-4135<br>**E-mail:** bjoslin@danasafetysupply.com |

| Quote Date | Ship Via | F.O.B. | Customer PO Number | Payment Method |
|---|---|---|---|---|
| 11/01/24 | GROUND FREIGHT NON | QUOTED FREIGHT | | NET30 |

| Entered By | Salesperson | Ordered By | Resale Number |
|---|---|---|---|
| Braydon Joslin | BRAYDON JOSLIN ROUND | Chief Woodring | 17605331440 |

| Order Quantity | Approve Quantity | Tax | Item Number / Description | Unit Price | Extended Price |
|---|---|---|---|---|---|
| 1 | 1 | Y | C-ARM-102<br>HAV ARM REST - MOUNTS TO SIDE OF CONSOLE BOX<br>Warehouse: RROC | 62.6700 | 62.67 |
| 1 | 1 | Y | C-EB25-XTL-1P<br>HAV 1-PIECE EQ BRKT FOR XTL REMOTE HEADS & APX75(<br>Warehouse: RROC<br>1 PIECE BRACKET FOR REMOTE RADIO CONTROL HEAD<br>********** | 22.0000 | 22.00 |
| 1 | 1 | Y | DS-PAN-1502-4<br>HAV DOCKING STATION FOR PANASONIC TOUGHBOOK 40 LAPTOP<br>Warehouse: RROC<br>Docking Station For Panasonic TOUGHBOOK 40 Laptop With Standard Port Replication & Quad Pass-Thru Antenna Connections & LIND Power Supply | 1,104.0000 | 1,104.00 |
| 1 | 1 | Y | GK10342UHK<br>SMC DUAL VERT. RACK 2 UNIV. LOCKS W/ HC KEY<br>Warehouse: RROC<br>"Dual T-Rail Mount2 Universal XL Handcuff Key Override" | 426.3000 | 426.30 |
| 1 | 1 | Y | PK1186ITU20TM<br>SMC #10XL C2 COATED POLY PARTITION<br>Warehouse: RROC<br>PK1186ITU20TM<br>#10XL C2 COATED POLY PARTITION tall<br>20-22 INTERCEPTOR UTILITY | 769.3000 | 769.30 |

| | |
|---|---|
| **Print Date** | 11/01/24 |
| **Print Time** | 04:14:32 PM |
| **Page No.** | 6 |

Printed By: Braydon Joslin

**Continued on Next Page**

**DANA SAFETY SUPPLY, INC**
**4809 KOGER BLVD**
**GREENSBORO, NC 27407**

# Sales Quote

**Telephone:** 800-845-0405

| | |
|---|---|
| **Sales Quote No.** | 552606 |
| **Customer No.** | SILSBEE |

**Bill To**

SILSBEE FORD FLEET GROUP
**NEED ONLY ONE INVOICE PER SO#**
**NEED ONLY ONE INVOICE PER SO#**
SILSBEE, TX 77656

**Contact:** SETH GAMBLIN
**Telephone:** 512-436-1313
**E-mail:** sgamblinsilsbeefleet@gmail.com

**Ship To**

(For Pickup)
ROUND ROCK WAREHOUSE
900 E. OLD SETTLERS BLVD
Bldg 4 Ste 400
ROUND ROCK, TX 78664

**Contact:** Braydon Joslin
**Telephone:** 512-781-4135
**E-mail:** bjoslin@danasafetysupply.com

| Quote Date | Ship Via | F.O.B. | Customer PO Number | Payment Method |
|---|---|---|---|---|
| 11/01/24 | GROUND FREIGHT NON | QUOTED FREIGHT | | NET30 |

| Entered By | Salesperson | Ordered By | Resale Number |
|---|---|---|---|
| Braydon Joslin | BRAYDON JOSLIN ROUND | Chief Woodring | 17605331440 |

| Order Quantity | Approve Quantity | Tax | Item Number / Description | Unit Price | Extended Price |
|---|---|---|---|---|---|
| 1 | 1 | Y | MISC<br>SMC QK2141ITU25 SEAT AND CARGO BARRIER COMBO<br>Warehouse: RROC | 1,672.3000 | 1,672.30 |
| 1 | 1 | Y | DK0100ITU20<br>SMC TPO POLYMER OVER MOLDED DOOR SKIN<br>Warehouse: RROC<br>DK0100ITU20 | 230.3000 | 230.30 |
| 1 | 1 | Y | WK0514ITU20<br>SMC VERTICALSTEEL WINDOW BARS FOR 2020+ PIUT<br>Warehouse: RROC | 230.3000 | 230.30 |
| 1 | 1 | Y | TK0841ITU20<br>SMC CARGO BOX DSE-BSN 20-20 ITU<br>Warehouse: RROC<br>DSE SLIDING TOP DRAWER WITH ELECTRONIC COMBINATION LOCK<br>BSN BASE SLIDING WITH NO LOCK | 1,434.3000 | 1,434.30 |
| 1 | 1 | Y | TPA9289<br>SMC CARGO BOX SLIDING RADIO TRAY (TRN)<br>Warehouse: RROC<br>RADIO TRAY FOR CARGO BOX WITH NO LOCK<br>**********<br>*DO NOT USE RADIO TRAY WITH ULTIMATE K9. RADIO TRAY BLOCKS SPARE TIRE* | 272.9900 | 272.99 |

| | |
|---|---|
| **Print Date** | 11/01/24 |
| **Print Time** | 04:14:32 PM |
| **Page No.** | 7 |

Printed By: Braydon Joslin

**Continued on Next Page**

# Sales Quote

**DANA SAFETY SUPPLY, INC**
**4809 KOGER BLVD**
**GREENSBORO, NC 27407**

**Telephone:** 800-845-0405

| | |
|---|---|
| **Sales Quote No.** | 552606 |
| **Customer No.** | SILSBEE |

**Bill To**

SILSBEE FORD FLEET GROUP
**NEED ONLY ONE INVOICE PER SO#**
**NEED ONLY ONE INVOICE PER SO#**
SILSBEE, TX 77656

**Contact:** SETH GAMBLIN
**Telephone:** 512-436-1313
**E-mail:** sgamblinsilsbeefleet@gmail.com

**Ship To**

(For Pickup)
ROUND ROCK WAREHOUSE
900 E. OLD SETTLERS BLVD
Bldg 4 Ste 400
ROUND ROCK, TX 78664

**Contact:** Braydon Joslin
**Telephone:** 512-781-4135
**E-mail:** bjoslin@danasafetysupply.com

| Quote Date | Ship Via | F.O.B. | Customer PO Number | Payment Method |
|---|---|---|---|---|
| 11/01/24 | GROUND FREIGHT NON | QUOTED FREIGHT | | NET30 |

| Entered By | Salesperson | Ordered By | Resale Number |
|---|---|---|---|
| Braydon Joslin | BRAYDON JOSLIN ROUND | Chief Woodring | 17605331440 |

| Order Quantity | Approve Quantity | Tax | Item Number / Description | Unit Price | Extended Price |
|---|---|---|---|---|---|
| 1 | 1 | Y | 75454<br>SLI Stinger DS LED HL w/120V AC/12V DC – 2 holders (Ni<br>Warehouse: RROC | 159.9900 | 159.99 |
| 1 | 1 | Y | MISC<br>ANTENNA & COAX KIT FOR APX, IBR900 ROUTER, FZ40<br>Warehouse: RROC | 750.0000 | 750.00 |
| 1 | 1 | Y | TINT<br>Vehicle Window Tint Per Customers Specs<br>Warehouse: RROC<br>Ceramic Front 2 to Match Rear 2 Factory | 199.0000 | 199.00 |
| 1 | 1 | Y | 5026B<br>BlueSea 12 Circuit Fuse Block w/ Ground Bus and Cover<br>Warehouse: RROC | 50.0000 | 50.00 |
| 1 | 1 | Y | 5032B<br>BLUE SEA SYSTEM FUSE BLOCK ST BLADE<br>Warehouse: RROC | 50.0000 | 50.00 |
| 1 | 1 | N | INFO<br>CUSTOMER SUPPLIED EQUIPMENT LISTED<br>Warehouse: RROC<br>AXON FLEET 3 CAMERA SYSTEM<br>PANASONIC FZ-40 | 0.0000 | 0.00 |

| | |
|---|---|
| **Print Date** | 11/01/24 |
| **Print Time** | 04:14:32 PM |
| **Page No.** | 8 |

Printed By: Braydon Joslin

**Continued on Next Page**

DANA SAFETY SUPPLY, INC
4809 KOGER BLVD
GREENSBORO, NC 27407

# Sales Quote

**Telephone:** 800-845-0405

| | |
|---|---|
| **Sales Quote No.** | 552606 |
| **Customer No.** | SILSBEE |

**Bill To**

SILSBEE FORD FLEET GROUP
**NEED ONLY ONE INVOICE PER SO#**
**NEED ONLY ONE INVOICE PER SO#**
SILSBEE, TX 77656

**Contact:** SETH GAMBLIN
**Telephone:** 512-436-1313
**E-mail:** sgamblinsilsbeefleet@gmail.com

**Ship To**

(For Pickup)
ROUND ROCK WAREHOUSE
900 E. OLD SETTLERS BLVD
Bldg 4 Ste 400
ROUND ROCK, TX 78664

**Contact:** Braydon Joslin
**Telephone:** 512-781-4135
**E-mail:** bjoslin@danasafetysupply.com

| Quote Date | Ship Via | F.O.B. | Customer PO Number | Payment Method |
|---|---|---|---|---|
| 11/01/24 | GROUND FREIGHT NON | QUOTED FREIGHT | | NET30 |

| Entered By | Salesperson | Ordered By | Resale Number |
|---|---|---|---|
| Braydon Joslin | BRAYDON JOSLIN ROUND | Chief Woodring | 17605331440 |

| Order Quantity | Approve Quantity | Tax | Item Number / Description | Unit Price | Extended Price |
|---|---|---|---|---|---|
| 1 | 1 | Y | INSTALL KIT<br>MISC INSTALLATION SUPPLIES I.E.<br>Warehouse: RROC<br>LOOM, WIRE, HARDWARE, CONNECTORS, ETC<br>********** | 525.0000 | 525.00 |
| 1 | 1 | Y | INSTALL KIT<br>MISC INSTALLATION SUPPLIES I.E.<br>Warehouse: RROC<br>LOOM, WIRE, HARDWARE, CONNECTORS, ETC<br>********** | 5,100.0000 | 5,100.00 |

**Approved By:** _____

☐ **Approve All Items & Quantities**

**Quote Good for 30 Days**

| | |
|---|---|
| **Print Date** | 11/01/24 |
| **Print Time** | 04:14:32 PM |
| **Page No.** | 9 |

Printed By: Braydon Joslin

| | |
|---|---|
| **Subtotal** | 19,410.24 |
| **Freight** | 950.00 |
| **Order Total** | 20,360.24 |

# PRODUCT PRICING SUMMARY

**TIPS USA 210907 AUTOMOBILES**

**VENDOR- Silsbee Ford, 1211 Hwy 96 N., Silsbee TX 77656**

**End User:** BLANCO COUNTY SO PATROL
**Contact:**
**Email:**
**Product Description:** FORD POLICE INTERCEPTOR UTILITY

**Prepared by:** SETH GAMBLIN
**Phone:** 512.436.1313
**Email:** SGAMBLIN.SILSBEEFLEET@GMAIL.COM
**Date:** November 1, 2024

**A.** **Bid Item:**

**A. Base Price:** $ 48,395.00

**B.** **Factory Options**

| Code | Description | Bid Price | Code | Description | Bid Price |
|---|---|---|---|---|---|
| K8A | 2025 FORD PIU | $ 1,995.00 | | | |
| 99B | 3.3L V6 DIRECT-INJECTION ENGINE | $ - | | | |
| 86T | TAIL LAMP/POLICE HOUSING | $ 60.00 | | | |
| 17A | AUX AIR | $ 610.00 | | | |
| 55F | KEY FOB 6 totsl | $ 340.00 | | | |
| 60A | GRILLE LIGHTS, SIREN, SPEAKER WIRING | $ 50.00 | | | |
| 61B | OBD-II SPLITTER | $ 55.00 | | | |
| 51R | DRIVER SIDE SPOT LED | $ 395.00 | | | |

**Total of B. Published Options:** $ 3,505.00

**Published Option Discount (5%)** $ (75.50)

**C.** **Unpublished Options**

$= 43.6 %

| Description | Bid Price | Options | Bid Price |
|---|---|---|---|
| | | EXTERIOR- WHITE | |
| | | INTERIOR- 96 | |
| DANA INSTALL 552596-A | $ 22,627.53 | | |
| | | | |
| | | UITS ON ORDER ** | |
| | | | |
| | | ETA TO US EARLY NOV 2024 | |
| | | | |
| | | | |

**Total of C. Unpublished Options:** $ 22,627.53

**D.** **Floor Plan Interest (for in-stock and/or equipped vehicles):** $ -

**E.** **Lot Insurance (for in-stock and/or equipped vehicles):** $ -

**F.** **Contract Price Adjustment:**

**G.** **Additional Delivery Charge:** 250 — $ 437.50

**H.** **Subtotal:** $ 74,889.53

**I.** **Quantity Ordered** 2 **x H =** $ 149,779.06

**J.** **Trade in:**

**K.**

**L.** **Total Purchase Price** $ 149,779.06

**DANA SAFETY SUPPLY, INC**
**4809 KOGER BLVD**
**GREENSBORO, NC 27407**

# Sales Quote

**Telephone:** 800-845-0405

| | |
|---|---|
| **Sales Quote No.** | 552596-A |
| **Customer No.** | SILSBEE |

**Bill To**

SILSBEE FORD FLEET GROUP
**NEED ONLY ONE INVOICE PER SO#**
**NEED ONLY ONE INVOICE PER SO#**
SILSBEE, TX 77656

**Contact:** SETH GAMBLIN
**Telephone:** 512-436-1313
**E-mail:** sgamblinsilsbeefleet@gmail.com

**Ship To**

(For Pickup)
ROUND ROCK WAREHOUSE
900 E. OLD SETTLERS BLVD
Bldg 4 Ste 400
ROUND ROCK, TX 78664

**Contact:** Braydon Joslin
**Telephone:** 512-781-4135
**E-mail:** bjoslin@danasafetysupply.com

| Quote Date | Ship Via | F.O.B. | Customer PO Number | Payment Method |
|---|---|---|---|---|
| 11/01/24 | GROUND FREIGHT NON | QUOTED FREIGHT | | NET30 |

| Entered By | Salesperson | Ordered By | Resale Number |
|---|---|---|---|
| Braydon Joslin | BRAYDON JOSLIN ROUND | Chief Woodring | 17605331440 |

| Order Quantity | Approve Quantity | Tax | Item Number / Description | Unit Price | Extended Price |
|---|---|---|---|---|---|
| 2 | 2 | N | INFO<br>BLANCO CSO 2025 FORD PIU WHITE - PATROL x2<br>Warehouse: RROC | 0.0000 | 0.00 |
| 2 | 2 | N | INFO<br>FRONT OF VEHICLE<br>Warehouse: RROC | 0.0000 | 0.00 |
| 2 | 2 | Y | 36-2125<br>WESTIN 2025 FORD PI UTILITY PUSH BUMPER<br>Warehouse: RROC | 328.0000 | 656.00 |
| 2 | 2 | Y | 36-2125W<br>WESTIN 2025 FORD PI UTILITY UPPER WINGS<br>Warehouse: RROC | 206.4100 | 412.82 |
| 2 | 2 | Y | 36-2125PB<br>WESTIN 2025 FORD PI UTILITY PIT BAR<br>Warehouse: RROC | 298.0000 | 596.00 |
| 2 | 2 | Y | 36-6005SMP4<br>Westin Elite 23.5" 4-Light Channel mpower HD<br>Warehouse: RROC | 38.0000 | 76.00 |
| 2 | 2 | Y | 36-2125WC<br>WESTIN WIRE COVER FOR PB<br>Warehouse: RROC | 38.0000 | 76.00 |

| | |
|---|---|
| **Print Date** | 11/01/24 |
| **Print Time** | 04:16:20 PM |
| **Page No.** | 1 |

Printed By: Braydon Joslin

**Continued on Next Page**

# Sales Quote

**DANA SAFETY SUPPLY, INC**
**4809 KOGER BLVD**
**GREENSBORO, NC 27407**

**Telephone:** 800-845-0405

| | |
|---|---|
| **Sales Quote No.** | 552596-A |
| **Customer No.** | SILSBEE |

**Bill To**

SILSBEE FORD FLEET GROUP
**NEED ONLY ONE INVOICE PER SO#**
**NEED ONLY ONE INVOICE PER SO#**
SILSBEE, TX 77656

**Contact:** SETH GAMBLIN
**Telephone:** 512-436-1313
**E-mail:** sgamblinsilsbeefleet@gmail.com

**Ship To**

(For Pickup)
ROUND ROCK WAREHOUSE
900 E. OLD SETTLERS BLVD
Bldg 4 Ste 400
ROUND ROCK, TX 78664

**Contact:** Braydon Joslin
**Telephone:** 512-781-4135
**E-mail:** bjoslin@danasafetysupply.com

| Quote Date | Ship Via | F.O.B. | Customer PO Number | Payment Method |
|---|---|---|---|---|
| 11/01/24 | GROUND FREIGHT NON | QUOTED FREIGHT | | NET30 |

| Entered By | Salesperson | Ordered By | Resale Number |
|---|---|---|---|
| Braydon Joslin | BRAYDON JOSLIN ROUND | Chief Woodring | 17605331440 |

| Order Quantity | Approve Quantity | Tax | Item Number / Description | Unit Price | Extended Price |
|---|---|---|---|---|---|
| 8 | 8 | Y | EMPS4STS5RBW<br>SOI, MPWR HD, 4", STM, CLR HSG, RED/BLU/WHT<br>Warehouse: RROC<br>4 in Each Top Channel PB | 126.9300 | 1,015.44 |
| 4 | 4 | Y | EMPS2SMS5RBW<br>SOI, MPWR FASCIA, 4", SM, BLK HSG, RED/BLU/WHT<br>Warehouse: RROC<br>1 on Each Side of PB with Bezel | 126.9300 | 507.72 |
| 4 | 4 | Y | PMPSABZ01B<br>SOI 4" MPOWER METAL BLACK BEZEL<br>Warehouse: RROC | 11.0000 | 44.00 |
| 2 | 2 | Y | ELUC3H010E<br>SOI UNIV UNDERCOVER LED INSERT, 5 WIRE BLUE/WHITE<br>Warehouse: RROC | 77.4700 | 154.94 |
| 2 | 2 | Y | ELUC3H010D<br>SOI UNIV UNDERCOVER LED INSERT, 5 WIRE RED/WHITE<br>Warehouse: RROC | 77.4700 | 154.94 |
| 4 | 4 | Y | ETSS100J<br>SOI 100J SERIES COMPOSITE SPEAKER<br>Warehouse: RROC<br>100J series composite speaker w/ universal bail brkt-100 watt | 183.0000 | 732.00 |

| | |
|---|---|
| **Print Date** | 11/01/24 |
| **Print Time** | 04:16:20 PM |
| **Page No.** | 2 |

Printed By: Braydon Joslin

**Continued on Next Page**

**DANA SAFETY SUPPLY, INC**
**4809 KOGER BLVD**
**GREENSBORO, NC 27407**

# Sales Quote

**Telephone:** 800-845-0405

| | |
|---|---|
| **Sales Quote No.** | 552596-A |
| **Customer No.** | SILSBEE |

**Bill To**

SILSBEE FORD FLEET GROUP
**NEED ONLY ONE INVOICE PER SO#**
**NEED ONLY ONE INVOICE PER SO#**
SILSBEE, TX 77656

**Contact:** SETH GAMBLIN
**Telephone:** 512-436-1313
**E-mail:** sgamblinsilsbeefleet@gmail.com

**Ship To**

(For Pickup)
ROUND ROCK WAREHOUSE
900 E. OLD SETTLERS BLVD
Bldg 4 Ste 400
ROUND ROCK, TX 78664

**Contact:** Braydon Joslin
**Telephone:** 512-781-4135
**E-mail:** bjoslin@danasafetysupply.com

| Quote Date | Ship Via | F.O.B. | Customer PO Number | Payment Method |
|---|---|---|---|---|
| 11/01/24 | GROUND FREIGHT NON | QUOTED FREIGHT | | NET30 |

| Entered By | Salesperson | Ordered By | Resale Number |
|---|---|---|---|
| Braydon Joslin | BRAYDON JOSLIN ROUND | Chief Woodring | 17605331440 |

| Order Quantity | Approve Quantity | Tax | Item Number / Description | Unit Price | Extended Price |
|---|---|---|---|---|---|
| 2 | 2 | Y | MISC<br>SOI EMPLB01KFR-4QB MPOWER EXT LIGHTBAR 48"<br>Warehouse: RROC<br>48"/122cm 10-32 Volt MPOWER 6 INCH LED LIGHTBAR W/ 15' LIN DSC TECHNOLOGY<br>/D08//D08/\|D12\|\|D12\|\|D12\|\|D12\|\|D12\|\|D12\|\D08\\D08\<br>/R_W//R_W/ \|R_W\|\|R_W\|\|R_W\|\|B_W\|\|B_W\|\|B_W\| \B_W\\B_W\<br>\|D08\| \| SILVER \| O \|D08\|<br>\|R_W\| \| CLEAR \| O \|B_W\|<br>\D08\\D08\ \|D12\|\|D12\|\|D12\|\|D12\|\|D12\|\|D12\| /D08//D08/<br>\R_W\\R_W\\R_A\|\|R_A\|\|R_A\|\|B_A\|\|B_A\|\|B_A\|/B_W//B_W/<br>Accessories - PNFLBSPLT1, AUTO-DIM<br>Mount - Fixed Height Mount (PMPLBK01) & Extension Plate (PMPLBKXT)<br>Hook - PNFLBF44<br>Vehicle - Ford Explorer/PI SUV w/o Roof Rack (2020-23) | 2,531.6700 | 5,063.34 |
| 2 | 2 | N | INFO<br>SIDE OF VEHICLE<br>Warehouse: RROC | 0.0000 | 0.00 |
| 4 | 4 | Y | ENT3B3RBW<br>SOI INTERSECTOR 18-LED SFC MNT,BLK HSG RED/BLUE/WHITE<br>Warehouse: RROC | 173.6000 | 694.40 |
| 2 | 2 | Y | PMP2BKUMB8-P<br>SOI UNDER MIRROR MOUNT BRACKET KIT, PASS., 2025 PIU<br>Warehouse: RROC | 25.0000 | 50.00 |

| | |
|---|---|
| **Print Date** | 11/01/24 |
| **Print Time** | 04:16:20 PM |
| **Page No.** | 3 |

Printed By: Braydon Joslin

**Continued on Next Page**

# Sales Quote

**DANA SAFETY SUPPLY, INC**
**4809 KOGER BLVD**
**GREENSBORO, NC 27407**

**Telephone:** 800-845-0405

| | |
|---|---|
| **Sales Quote No.** | 552596-A |
| **Customer No.** | SILSBEE |

**Bill To**

SILSBEE FORD FLEET GROUP
**NEED ONLY ONE INVOICE PER SO#**
**NEED ONLY ONE INVOICE PER SO#**
SILSBEE, TX 77656

**Contact:** SETH GAMBLIN
**Telephone:** 512-436-1313
**E-mail:** sgamblinsilsbeefleet@gmail.com

**Ship To**

(For Pickup)
ROUND ROCK WAREHOUSE
900 E. OLD SETTLERS BLVD
Bldg 4 Ste 400
ROUND ROCK, TX 78664

**Contact:** Braydon Joslin
**Telephone:** 512-781-4135
**E-mail:** bjoslin@danasafetysupply.com

| Quote Date | Ship Via | F.O.B. | Customer PO Number | Payment Method |
|---|---|---|---|---|
| 11/01/24 | GROUND FREIGHT NON | QUOTED FREIGHT | | NET30 |

| Entered By | Salesperson | Ordered By | Resale Number |
|---|---|---|---|
| Braydon Joslin | BRAYDON JOSLIN ROUND | Chief Woodring | 17605331440 |

| Order Quantity | Approve Quantity | Tax | Item Number / Description | Unit Price | Extended Price |
|---|---|---|---|---|---|
| 2 | 2 | Y | PMP2BKUMB8-D<br>SOI UNDER MIRROR MOUNT BRACKET KIT, DRIVER, 2025<br>Warehouse: RROC | 25.0000 | 50.00 |
| 8 | 8 | Y | EMPS2STS5RBW<br>SOI, MPWR FASCIA, 4", STM, BLK HSG, RED/BLU/WHT<br>Warehouse: RROC<br>2 in Each Cargo Window Shroud (4 Total per Unit) | 126.9300 | 1,015.44 |
| 4 | 4 | Y | PMP2WSDDB<br>SOI 4" MPOWER DUAL WINDOW SHROUD-BLACK<br>Warehouse: RROC | 18.0000 | 72.00 |
| 2 | 2 | N | INFO<br>REAR OF VEHICLE<br>Warehouse: RROC | 0.0000 | 0.00 |
| 2 | 2 | Y | EMPAK017JS<br>SOI, MPWR ARRW, REAR, 6MOD, 2020-23 PIU, RA/BA<br>Warehouse: RROC<br>Ford Explorer/PI Utility (2020-23) 6 Mod Split Rear w/ 4" Modules<br>(DRV) \|D12\|\|D12\|\|D12\| \|D12\|\|D12\|\|D12\| (PAS)<br>\|R_A\|\|R_A\|\|R_A\|X X\|B_A\|\|B_A\|\|B_A\|<br>Accessories: PNFLBSPLT1<br>LIN DSC w/ Breakout Box (Included) | 979.5600 | 1,959.12 |

| | |
|---|---|
| **Print Date** | 11/01/24 |
| **Print Time** | 04:16:20 PM |
| **Page No.** | 4 |

Printed By: Braydon Joslin

**Continued on Next Page**

**DANA SAFETY SUPPLY, INC**
**4809 KOGER BLVD**
**GREENSBORO, NC 27407**

# Sales Quote

**Telephone:** 800-845-0405

| | |
|---|---|
| **Sales Quote No.** | 552596-A |
| **Customer No.** | SILSBEE |

**Bill To**

SILSBEE FORD FLEET GROUP
**NEED ONLY ONE INVOICE PER SO#**
**NEED ONLY ONE INVOICE PER SO#**
SILSBEE, TX 77656

**Contact:** SETH GAMBLIN
**Telephone:** 512-436-1313
**E-mail:** sgamblinsilsbeefleet@gmail.com

**Ship To**

(For Pickup)
ROUND ROCK WAREHOUSE
900 E. OLD SETTLERS BLVD
Bldg 4 Ste 400
ROUND ROCK, TX 78664

**Contact:** Braydon Joslin
**Telephone:** 512-781-4135
**E-mail:** bjoslin@danasafetysupply.com

| Quote Date | Ship Via | F.O.B. | Customer PO Number | Payment Method |
|---|---|---|---|---|
| 11/01/24 | GROUND FREIGHT NON | QUOTED FREIGHT | | NET30 |

| Entered By | Salesperson | Ordered By | Resale Number |
|---|---|---|---|
| Braydon Joslin | BRAYDON JOSLIN ROUND | Chief Woodring | 17605331440 |

| Order Quantity | Approve Quantity | Tax | Item Number / Description | Unit Price | Extended Price |
|---|---|---|---|---|---|
| 4 | 4 | Y | EMPS2QMS5RBW<br>SOI, MPWR FASCIA, 4", QM, BLK HSG, RED/BLU/WHT<br>Warehouse: RROC<br>mpower® 4" Fascia Light w/ Quick Mount, 18" hard wire w/ sync option, SAE Class 1 & CA Title 13, 9-32 Vdc, Black Housing, 18 LED, Tricolor - Red/Blue/White | 126.9300 | 507.72 |
| 2 | 2 | Y | ELUC3H010D<br>SOI UNIV UNDERCOVER LED INSERT, 5 WIRE RED/WHITE<br>Warehouse: RROC<br>Driver Side Tail light Housing | 77.4700 | 154.94 |
| 2 | 2 | Y | ELUC3H010E<br>SOI UNIV UNDERCOVER LED INSERT, 5 WIRE BLUE/WHITE<br>Warehouse: RROC<br>Passenger Side Tail light Housing | 77.4700 | 154.94 |
| 4 | 4 | Y | EMPS2QMS5RBW<br>SOI, MPWR FASCIA, 4", QM, BLK HSG, RED/BLU/WHT<br>Warehouse: RROC<br>Mount 2 under Hatch Inside for Rear Lighting | 126.9300 | 507.72 |
| 2 | 2 | N | INFO<br>INTERIOR OF VEHICLE<br>Warehouse: RROC | 0.0000 | 0.00 |

| | |
|---|---|
| **Print Date** | 11/01/24 |
| **Print Time** | 04:16:20 PM |
| **Page No.** | 5 |

Printed By: Braydon Joslin

**Continued on Next Page**

# Sales Quote

**DANA SAFETY SUPPLY, INC**
**4809 KOGER BLVD**
**GREENSBORO, NC 27407**

**Telephone:** 800-845-0405

| | |
|---|---|
| **Sales Quote No.** | 552596-A |
| **Customer No.** | SILSBEE |

**Bill To**

SILSBEE FORD FLEET GROUP
**NEED ONLY ONE INVOICE PER SO#**
**NEED ONLY ONE INVOICE PER SO#**
SILSBEE, TX 77656

**Contact:** SETH GAMBLIN
**Telephone:** 512-436-1313
**E-mail:** sgamblinsilsbeefleet@gmail.com

**Ship To**

(For Pickup)
ROUND ROCK WAREHOUSE
900 E. OLD SETTLERS BLVD
Bldg 4 Ste 400
ROUND ROCK, TX 78664

**Contact:** Braydon Joslin
**Telephone:** 512-781-4135
**E-mail:** bjoslin@danasafetysupply.com

| Quote Date | Ship Via | F.O.B. | Customer PO Number | Payment Method |
|---|---|---|---|---|
| 11/01/24 | GROUND FREIGHT NON | QUOTED FREIGHT | | NET30 |

| Entered By | Salesperson | Ordered By | Resale Number |
|---|---|---|---|
| Braydon Joslin | BRAYDON JOSLIN ROUND | Chief Woodring | 17605331440 |

| Order Quantity | Approve Quantity | Tax | Item Number / Description | Unit Price | Extended Price |
|---|---|---|---|---|---|
| 2 | 2 | Y | MISC<br>HAVIS PKG-VSX-1800-INUT-PM-5 CONSOLE PACKAGE<br>Warehouse: RROC<br>Front PocketJet 8 Printer Mount for Laptop Docking Stations for 2020-2025 Ford Interceptor Utility<br>*Includes Cup Holders, Printer Armrest, & Motion Device* | 1,146.6700 | 2,293.34 |
| 2 | 2 | Y | CUP2-1001<br>HAV Self-Adjusting Double Cup Holder<br>Warehouse: RROC | 44.6700 | 89.34 |
| 2 | 2 | Y | C-ARM-102<br>HAV ARM REST - MOUNTS TO SIDE OF CONSOLE BOX<br>Warehouse: RROC | 62.6700 | 125.34 |
| 2 | 2 | Y | C-EB25-XTL-1P<br>HAV 1-PIECE EQ BRKT FOR XTL REMOTE HEADS & APX75(<br>Warehouse: RROC<br>1 PIECE BRACKET FOR REMOTE RADIO CONTROL HEAD<br>********** | 22.0000 | 44.00 |
| 2 | 2 | Y | DS-PAN-1502-4<br>HAV DOCKING STATION FOR PANASONIC TOUGHBOOK 40 LAPTOP<br>Warehouse: RROC<br>Docking Station For Panasonic TOUGHBOOK 40 Laptop With Standard Port Replication & Quad Pass-Thru Antenna Connections & LIND Power Supply | 1,104.0000 | 2,208.00 |

| | |
|---|---|
| **Print Date** | 11/01/24 |
| **Print Time** | 04:16:20 PM |
| **Page No.** | 6 |

Printed By: Braydon Joslin

**Continued on Next Page**

**DANA SAFETY SUPPLY, INC**
**4809 KOGER BLVD**
**GREENSBORO, NC 27407**

**Telephone:** 800-845-0405

# Sales Quote

| | |
|---|---|
| **Sales Quote No.** | 552596-A |
| **Customer No.** | SILSBEE |

**Bill To**

SILSBEE FORD FLEET GROUP
**NEED ONLY ONE INVOICE PER SO#**
**NEED ONLY ONE INVOICE PER SO#**
SILSBEE, TX 77656

**Contact:** SETH GAMBLIN
**Telephone:** 512-436-1313
**E-mail:** sgamblinsilsbeefleet@gmail.com

**Ship To**

(For Pickup)
ROUND ROCK WAREHOUSE
900 E. OLD SETTLERS BLVD
Bldg 4 Ste 400
ROUND ROCK, TX 78664

**Contact:** Braydon Joslin
**Telephone:** 512-781-4135
**E-mail:** bjoslin@danasafetysupply.com

| Quote Date | Ship Via | F.O.B. | Customer PO Number | Payment Method |
|---|---|---|---|---|
| 11/01/24 | GROUND FREIGHT NON | QUOTED FREIGHT | | NET30 |

| Entered By | Salesperson | Ordered By | Resale Number |
|---|---|---|---|
| Braydon Joslin | BRAYDON JOSLIN ROUND | Chief Woodring | 17605331440 |

| Order Quantity | Approve Quantity | Tax | Item Number / Description | Unit Price | Extended Price |
|---|---|---|---|---|---|
| 2 | 2 | Y | GK10342UHK<br>SMC DUAL VERT. RACK 2 UNIV. LOCKS W/ HC KEY<br>Warehouse: RROC<br>"Dual T-Rail Mount2 Universal XL Handcuff Key Override" | 426.3000 | 852.60 |
| 2 | 2 | Y | PK1186ITU20TM<br>SMC #10XL C2 COATED POLY PARTITION<br>Warehouse: RROC<br>PK1186ITU20TM<br>#10XL C2 COATED POLY PARTITION tall<br>20-22 INTERCEPTOR UTILITY | 769.3000 | 1,538.60 |
| 2 | 2 | Y | MISC<br>SMC QK2141ITU25 SEAT AND CARGO BARRIER COMBO<br>Warehouse: RROC | 1,672.3000 | 3,344.60 |
| 2 | 2 | Y | DK0100ITU20<br>SMC TPO POLYMER OVER MOLDED DOOR SKIN<br>Warehouse: RROC<br>DK0100ITU20 | 230.3000 | 460.60 |
| 2 | 2 | Y | WK0514ITU20<br>SMC VERTICALSTEEL WINDOW BARS FOR 2020+ PIUT<br>Warehouse: RROC | 230.3000 | 460.60 |

| | |
|---|---|
| **Print Date** | 11/01/24 |
| **Print Time** | 04:16:20 PM |
| **Page No.** | 7 |

Printed By: Braydon Joslin

**Continued on Next Page**

# Sales Quote

**DANA SAFETY SUPPLY, INC**
**4809 KOGER BLVD**
**GREENSBORO, NC 27407**

**Telephone:** 800-845-0405

| | |
|---|---|
| **Sales Quote No.** | 552596-A |
| **Customer No.** | SILSBEE |

| Bill To | Ship To |
|---|---|
| SILSBEE FORD FLEET GROUP<br>**NEED ONLY ONE INVOICE PER SO#**<br>**NEED ONLY ONE INVOICE PER SO#**<br>SILSBEE, TX 77656 | (For Pickup)<br>ROUND ROCK WAREHOUSE<br>900 E. OLD SETTLERS BLVD<br>Bldg 4 Ste 400<br>ROUND ROCK, TX 78664 |
| **Contact:** SETH GAMBLIN<br>**Telephone:** 512-436-1313<br>**E-mail:** sgamblinsilsbeefleet@gmail.com | **Contact:** Braydon Joslin<br>**Telephone:** 512-781-4135<br>**E-mail:** bjoslin@danasafetysupply.com |

| Quote Date | Ship Via | F.O.B. | Customer PO Number | Payment Method |
|---|---|---|---|---|
| 11/01/24 | GROUND FREIGHT NON | QUOTED FREIGHT | | NET30 |

| Entered By | Salesperson | Ordered By | Resale Number |
|---|---|---|---|
| Braydon Joslin | BRAYDON JOSLIN ROUND | Chief Woodring | 17605331440 |

| Order Quantity | Approve Quantity | Tax | Item Number / Description | Unit Price | Extended Price |
|---|---|---|---|---|---|
| 2 | 2 | Y | TK0841ITU20<br>SMC CARGO BOX DSE-BSN 20-20 ITU<br>Warehouse: RROC<br>DSE SLIDING TOP DRAWER WITH ELECTRONIC COMBINATION LOCK<br>BSN BASE SLIDING WITH NO LOCK | 1,434.3000 | 2,868.60 |
| 2 | 2 | Y | TPA9289<br>SMC CARGO BOX SLIDING RADIO TRAY (TRN)<br>Warehouse: RROC<br>RADIO TRAY FOR CARGO BOX WITH NO LOCK<br>**********<br>*DO NOT USE RADIO TRAY WITH ULTIMATE K9. RADIO TRAY BLOCKS SPARE TIRE* | 272.9900 | 545.98 |
| 2 | 2 | Y | 75454<br>SLI Stinger DS LED HL w/120V AC/12V DC – 2 holders (Ni<br>Warehouse: RROC | 159.9900 | 319.98 |
| 2 | 2 | Y | MISC<br>ANTENNA & COAX KIT FOR APX, IBR900 ROUTER, FZ40<br>Warehouse: RROC | 750.0000 | 1,500.00 |
| 2 | 2 | Y | TINT<br>Vehicle Window Tint Per Customers Specs<br>Warehouse: RROC<br>Ceramic Front 2 to Match Rear 2 Factory | 199.0000 | 398.00 |

| | |
|---|---|
| **Print Date** | 11/01/24 |
| **Print Time** | 04:16:20 PM |
| **Page No.** | 8 |

Printed By: Braydon Joslin

**Continued on Next Page**

**DANA SAFETY SUPPLY, INC**
**4809 KOGER BLVD**
**GREENSBORO, NC 27407**

# Sales Quote

**Telephone:** 800-845-0405

| | |
|---|---|
| **Sales Quote No.** | 552596-A |
| **Customer No.** | SILSBEE |

**Bill To**

SILSBEE FORD FLEET GROUP
**NEED ONLY ONE INVOICE PER SO#**
**NEED ONLY ONE INVOICE PER SO#**
SILSBEE, TX 77656

**Contact:** SETH GAMBLIN
**Telephone:** 512-436-1313
**E-mail:** sgamblinsilsbeefleet@gmail.com

**Ship To**

(For Pickup)
ROUND ROCK WAREHOUSE
900 E. OLD SETTLERS BLVD
Bldg 4 Ste 400
ROUND ROCK, TX 78664

**Contact:** Braydon Joslin
**Telephone:** 512-781-4135
**E-mail:** bjoslin@danasafetysupply.com

| Quote Date | Ship Via | F.O.B. | Customer PO Number | Payment Method |
|---|---|---|---|---|
| 11/01/24 | GROUND FREIGHT NON | QUOTED FREIGHT | | NET30 |

| Entered By | Salesperson | Ordered By | Resale Number |
|---|---|---|---|
| Braydon Joslin | BRAYDON JOSLIN ROUND | Chief Woodring | 17605331440 |

| Order Quantity | Approve Quantity | Tax | Item Number / Description | Unit Price | Extended Price |
|---|---|---|---|---|---|
| 2 | 2 | Y | 5026B<br>BlueSea 12 Circuit Fuse Block w/ Ground Bus and Cover<br>Warehouse: RROC | 50.0000 | 100.00 |
| 2 | 2 | Y | 5032B<br>BLUE SEA SYSTEM FUSE BLOCK ST BLADE<br>Warehouse: RROC | 50.0000 | 100.00 |
| 2 | 2 | N | INFO<br>CUSTOMER SUPPLIED EQUIPMENT LISTED<br>Warehouse: RROC | 0.0000 | 0.00 |
| 2 | 2 | Y | AXON FLEET 3 CAMERA SYSTEM<br>PANASONIC FZ-40<br>INSTALL KIT<br>MISC INSTALLATION SUPPLIES I.E.<br>Warehouse: RROC<br>LOOM, WIRE, HARDWARE, CONNECTORS, ETC<br>********** | 525.0000 | 1,050.00 |
| 2 | 2 | Y | INSTALL KIT<br>MISC INSTALLATION SUPPLIES I.E.<br>Warehouse: RROC<br>LOOM, WIRE, HARDWARE, CONNECTORS, ETC<br>********** | 5,200.0000 | 10,400.00 |

| | |
|---|---|
| **Print Date** | 11/01/24 |
| **Print Time** | 04:16:20 PM |
| **Page No.** | 9 |

Printed By: Braydon Joslin

**Continued on Next Page**

# Sales Quote

**DANA SAFETY SUPPLY, INC**
**4809 KOGER BLVD**
**GREENSBORO, NC 27407**

**Telephone:** 800-845-0405

| | |
|---|---|
| **Sales Quote No.** | 552596-A |
| **Customer No.** | SILSBEE |

| Bill To | Ship To |
|---|---|
| SILSBEE FORD FLEET GROUP<br>**NEED ONLY ONE INVOICE PER SO#**<br>**NEED ONLY ONE INVOICE PER SO#**<br>SILSBEE, TX 77656 | (For Pickup)<br>ROUND ROCK WAREHOUSE<br>900 E. OLD SETTLERS BLVD<br>Bldg 4 Ste 400<br>ROUND ROCK, TX 78664 |
| **Contact:** SETH GAMBLIN<br>**Telephone:** 512-436-1313<br>**E-mail:** sgamblinsilsbeefleet@gmail.com | **Contact:** Braydon Joslin<br>**Telephone:** 512-781-4135<br>**E-mail:** bjoslin@danasafetysupply.com |

| Quote Date | Ship Via | F.O.B. | Customer PO Number | Payment Method |
|---|---|---|---|---|
| 11/01/24 | GROUND FREIGHT NON | QUOTED FREIGHT | | NET30 |

| Entered By | Salesperson | Ordered By | Resale Number |
|---|---|---|---|
| Braydon Joslin | BRAYDON JOSLIN ROUND | Chief Woodring | 17605331440 |

| Order Quantity | Approve Quantity | Tax | Item Number / Description | Unit Price | Extended Price |
|---|---|---|---|---|---|
| | | | **Approved By:** _____<br>☐ **Approve All Items & Quantities**<br>**Quote Good for 30 Days** | | |

| | |
|---|---|
| **Print Date** | 11/01/24 |
| **Print Time** | 04:16:20 PM |
| **Page No.** | 1 |

Printed By: Braydon Joslin

| | |
|---|---|
| **Subtotal** | 43,355.06 |
| **Freight** | 1,900.00 |
| **Order Total** | 45,255.06 |

Anchor Fence

# THE ANCHOR GROUP, INC.

1470 N Business IH 35
New Braunfels, TX 78130
(830)606-5516

Anchor Access

# PROPOSAL

DATE: 6/11/2024
BUYER: BLANCO COUNTY SHERRIF'S OFFICE
ATTN: ROBERT WOODRING

PROJECT: BCSO PARKING LOT
LOCATION: JOHNSON CITY, TX
EMAIL: rwoodring@co.blanco.tx.us
PHONE: (512) 468-0506

This Proposal is valid for 30 days; otherwise, this Proposal shall be deemed withdrawn.

Anchor proposes to furnish materials, labor, supervision and equipment to perform the following:

**434 LF 8' TALL GALVANIZED CHAINLINK FENCE**
2" MESH, 9 GAUGE
2-7/8" OD TERMINAL POSTS
2-3/8" LINE POSTS – 8' O.C.
1-5/8" OD TOP RAIL & BRACING
INCLDUDES BEIGE PRIVACY SLATS
4 POINT BARBWIRE
2 EACH 24' CANTILEVER GATES
1 EACH 4' WIDE SINGLE WALK GATE
**INCLUDES SELF-CLOSING HINGES & EXTERIOR KEYPAD**

**SLIDE GATE OPERATORS**
1 EACH SOLAR LIFTMASTER CSL24
1 EACH ACCES KEYPADS
**INCLUDES BATTERY, SOLAR PANEL, LOOPS, & PHOTOEYES**

**LUMP SUM: $59,697.00**

SOLAR GATE OPERATOR & ACCESSORIES PROVIDED BASED ON RECOMMENDATIONS FROM MANUFACTURER
NUMBER OF CYCLES PER DAY BASED ON WEATHER CONDITIONS OUT OF ANCHOR FENCE'S CONTROL

**EXCLUSIONS:** HIGH VOLTAGE ELECTRICAL
SALES TAX, PERMITS, STAKES, GRADING, CLEARING, LOCATING UNDERGROUND UTILITIES, PAINTING, BONDS (WE ARE BONDABLE), CORE DRILLING, SURVEYING, ELECTRICAL OR CONTROL WIRING, CONDUITS, ELECTRICAL HOOKUPS, GROUNDING OF FENCE OR GATES, MOW STRIPS, EMBEDS, INSTALLATION OF EMBEDS, BOLLARDS, SIGNS, TRAFFIC CONTROL, GRADE BEAMS, TEMPORARY FENCE, FENCE REMOVAL, INSTALLATION OF SLEEVES, REMOVAL OF DIRT FROM POST HOLE EXCAVATION (DIRT TO BE SPREAD EVENLY AROUND HOLES) INDEMNIFICATION FOR ACTIONS OF ANY OTHERS BESIDES ANCHOR OR ITS SUBCONTRACTORS

**PAYMENT TERMS: NET 30 DAYS W.A.C.**

The Anchor Group reserves the right to review any bond form, provided by the General Contractor, before accepting the Sub-Contract Agreement.

BY: JACOB SUPAK

AXON

**Tenth Amendment to the Master Services and Purchasing Agreement**

This Tenth Amendment **("Amendment")** is between Axon Enterprise, Inc. (f/k/a Taser International, Inc.), a Delaware corporation **("Axon"),** and Blanco County **("Agency").** This Amendment is effective as of the last signature date on this Amendment **("Effective Date").** Axon and Agency are each a **"Party"** and collectively **"Parties".**

On September 7, 2017, the Parties entered into Master Services and Purchasing Agreement under Quote 123431, as amended by the First Amendment dated March 14, 2018, the Second Amendment dated February 10, 2021, the Third Amendment dated February 15, 2023, the Fourth Amendment dated March 17, 2023, the Fifth Amendment dated August 16, 2023, the Sixth Amendment dated November 22, 2023, the Seventh Amendment dated December 20, 2023, the Eighth Amendment dated January 9, 2024, and the Nineth Amendment dated February 8, 2024 **("Agreement").**

The Parties wish to incorporate further changes into the Agreement in order to expand the scope of offered products.

The Parties therefore agree as follows:

1. The attached documents are hereby incorporated into the Agreement:
   a. Cloud Services Terms of Use Appendix; Attachment A
   b. Quote# Q-616420-45560.916RS; Attachment B

2. All other terms and conditions of the Agreement shall remain unchanged and in full force and effect.

Each representative identified below declares that the representative is authorized to execute this Amendment as of the date of signature.

| **Axon Enterprise, Inc.** | **Blanco County (TX)** |
|---|---|
| Signature: _____ | Signature: _____ |
| Name: _____ | Name: _____ |
| Title: _____ | Title: _____ |
| Date: _____ | Date: _____ |

COPY

**Attachment A:**

# Axon Cloud Services Terms of Use Appendix

**Definitions**.

a. **"Customer Content"** is data uploaded into, ingested by, or created in Axon Cloud Services within Customer's tenant, including media or multimedia uploaded into Axon Cloud Services by Customer. Customer Content includes Evidence but excludes Non-Content Data.

b. **"Evidence"** is media or multimedia uploaded into Axon Evidence as 'evidence' by an Customer. Evidence is a subset of Customer Content.

c. **"Non-Content Data"** is data, configuration, and usage information about Customer's Axon Cloud Services tenant, Axon Devices and client software, and users that is transmitted or generated when using Axon Devices. Non-Content Data includes data about users captured during account management and customer support activities. Non-Content Data does not include Customer Content.

d. **"Personal Data"** means any information relating to an identified or identifiable natural person. An identifiable natural person is one who can be identified, directly or indirectly, in particular by reference to an identifier such as a name, an identification number, location data, an online identifier or to one or more factors specific to the physical, physiological, genetic, mental, economic, cultural or social identity of that natural person.

e. **"Provided Data"** means de-identified, de-personalized, data derived from Customer's TASER energy weapon deployment reports, related TASER energy weapon logs, body-worn camera footage, and incident reports.

f. **"Transformed Data"** means the Provided Data used for the purpose of quantitative evaluation of the performance and effectiveness of TASER energy weapons in the field across a variety of circumstances.

**Access**. Upon Axon granting Customer a subscription to Axon Cloud Services, Customer may access and use Axon Cloud Services to store and manage Customer Content. Customer may not exceed more end users than the Quote specifies. Axon Air requires an Axon Evidence subscription for each drone operator. For Axon Evidence Lite, Customer may access and use Axon Evidence only to store and manage TASER CEW and TASER CAM data (**"TASER Data"**). Customer may not upload non-TASER Data to Axon Evidence Lite.

**Customer Owns Customer Content**. Customer controls and owns all right, title, and interest in Customer Content. Except as outlined herein, Axon obtains no interest in Customer Content, and Customer Content is not Axon's business records. Customer is solely responsible for uploading, sharing, managing, and deleting Customer Content. Axon will only have access to Customer Content for the limited purposes set forth herein. Customer agrees to allow Axon access to Customer Content to (a) perform troubleshooting, maintenance, or diagnostic screenings; and (b) enforce this Agreement or policies governing use of the Axon products.

**Security**. Axon will implement commercially reasonable and appropriate measures to secure Customer Content against accidental or unlawful loss, access or disclosure. Axon will maintain a comprehensive information security program to protect Axon Cloud Services and Customer Content including logical, physical access, vulnerability, risk, and configuration management; incident monitoring and response; encryption of uploaded digital evidence; security education; and data protection. Axon agrees to the Federal Bureau of Investigation Criminal Justice Information Services Security Addendum for its digital evidence management systems or records.

**Customer Responsibilities**. Customer is responsible for (a) ensuring Customer owns Customer Content; (b) ensuring no Customer Content or Customer end user's use of Customer Content or Axon Cloud Services violates this Agreement or applicable laws; and (c) maintaining necessary computer equipment and Internet connections for use of Axon Cloud Services. If Customer becomes aware of any violation of this

Agreement by an end user, Customer will immediately terminate that end user's access to Axon Cloud Services.

a. Customer will also maintain the security of end usernames and passwords and security and access by end users to Customer Content. Customer is responsible for ensuring the configuration and utilization of Axon Cloud Services meet applicable Customer regulation and standards. Customer may not sell, transfer, or sublicense access to any other entity or person. Customer shall contact Axon immediately if an unauthorized party may be using Customer's account or Customer Content, or if account information is lost or stolen.

**Privacy**. Customer's use of Axon Cloud Services is subject to the Axon Cloud Services Privacy Policy, a current version of which is available at https://www.axon.com/legal/cloud-services-privacy-policy. Customer agrees to allow Axon access to Non-Content Data from Customer to (a) perform troubleshooting, maintenance, or diagnostic screenings; (b) provide, develop, improve, and support current and future Axon products and related services; and (c) enforce this Agreement or policies governing the use of Axon products.

**Axon Body Wi-Fi Positioning**. Axon Body cameras may offer a feature to enhance location services where GPS/GNSS signals may not be available, for instance, within buildings or underground. Customer administrators can manage their choice to use this service within the administrative features of Axon Cloud Services. If Customer chooses to use this service, Axon must also enable the usage of the feature for Customer's Axon Cloud Services tenant. Customer will not see this option with Axon Cloud Services unless Axon has enabled Wi-Fi Positioning for Customer's Axon Cloud Services tenant. When Wi-Fi Positioning is enabled by both Axon and Customer, Non-Content and Personal Data will be sent to Skyhook Holdings, Inc. ("**Skyhook**") to facilitate the Wi-Fi Positioning functionality. Data controlled by Skyhook is outside the scope of the Axon Cloud Services Privacy Policy and is subject to the Skyhook Services Privacy Policy.

**Storage**. For Axon Unlimited Device Storage subscriptions, Customer may store unlimited data in Customer's Axon Evidence account only if data originates from Axon Capture or the applicable Axon Device. Axon may charge Customer additional fees for exceeding purchased storage amounts. Axon may place Customer Content that Customer has not viewed or accessed for six (6) months into archival storage. Customer Content in archival storage will not have immediate availability and may take up to twenty-four (24) hours to access.

For Third-Party Unlimited Storage the following restrictions apply: (i) it may only be used in conjunction with a valid Axon's Evidence.com user license; (ii) is limited to data of the law enforcement Customer that purchased the Third-Party Unlimited Storage and the Axon's Evidence.com end user or Customer is prohibited from storing data for other law enforcement agencies; and (iii) Customer may only upload and store data that is directly related to: (1) the investigation of, or the prosecution of a crime; (2) common law enforcement activities; or (3) any Customer Content created by Axon Devices or Evidence.com.

**Location of Storage**. Axon may transfer Customer Content to third-party subcontractors for storage. Axon will determine the locations of data centers for storage of Customer Content. For United States agencies, Axon will ensure all Agency Content stored in Axon Cloud Services remains within the United States. Ownership of Customer Content remains with Customer.

**Suspension**. Axon may temporarily suspend Customer's or any end user's right to access or use any portion or all of Axon Cloud Services immediately upon notice, if Customer or end user's use of or registration for Axon Cloud Services may (a) pose a security risk to Axon Cloud Services or any third-party; (b) adversely impact Axon Cloud Services, the systems, or content of any other customer; (c) subject Axon, Axon's affiliates, or any third-party to liability; or (d) be fraudulent. Customer remains responsible for all fees incurred through suspension. Axon will not delete Customer Content because of suspension, except as specified in this Agreement.

**Axon Cloud Services Warranty**. Axon disclaims any warranties or responsibility for data corruption or errors before Customer uploads data to Axon Cloud Services.

**TASER Data Science Program.** Axon will provide a quantitative evaluation on the performance and effectiveness of TASER energy weapons in the field across a variety of circumstances.

If Customer purchases the TASER Data Science Program, Customer grants Axon, its affiliates, and assignees an irrevocable, perpetual, fully paid, royalty-free, and worldwide right and license to use Provided Data solely for the purposes of this Agreement and to create Transformed Data. Customer shall own all rights and title to Provided Data. Axon shall own all rights and title to Transformed Data and any derivatives of Transformed Data.

Axon grants to Customer an irrevocable, perpetual, fully paid, royalty-free, license to use to TASER Data Science report provided to Customer for its own internal purposes. **The Data Science report is provided "as is" and without any warranty of any kind.**

In the event Customer seeks Axon's deletion of Provided Data, it may submit a request to privacy@axon.com. Where reasonably capable of doing so, Axon will implement the request but at a minimum will not continue to collect Provided Data from Customer.

**Axon Records**. Axon Records is the software-as-a-service product that is generally available at the time Customer purchases an OSP 7 or OSP 10 bundle. During Customer's Axon Records Subscription Term, if any, Customer will be entitled to receive Axon's Update and Upgrade releases on an if-and-when available basis.

a. The Axon Records Subscription Term will end upon the completion of the Axon Records Subscription as documented in the Quote, or if purchased as part of an OSP 7 or OSP 10 bundle, upon completion of the OSP 7 or OSP 10 Term ("**Axon Records Subscription**")

b. An "**Update**" is a generally available release of Axon Records that Axon makes available from time to time. An "**Upgrade**" includes (i) new versions of Axon Records that enhance features and functionality, as solely determined by Axon; and/or (ii) new versions of Axon Records that provide additional features or perform additional functions. Upgrades exclude new products that Axon introduces and markets as distinct products or applications.

c. New or additional Axon products and applications, as well as any Axon professional services needed to configure Axon Records, are not included. If Customer purchases Axon Records as part of a bundled offering, the Axon Record subscription begins on the later of the (1) start date of that bundled offering, or (2) date Axon provisions Axon Records to Customer.

d. Users of Axon Records at the Customer may upload files to entities (incidents, reports, cases, etc) in Axon Records with no limit to the number of files and amount of storage. Notwithstanding the foregoing, Axon may limit usage should the Customer exceed an average rate of one-hundred (100) GB per user per year of uploaded files. Axon will not bill for overages.

**Axon Cloud Services Restrictions**. Customer and Customer end users (including employees, contractors, agents, officers, volunteers, and directors), may not, or may not attempt to:

a. reverse engineer, disassemble, or decompile Axon Cloud Services or apply any process to derive any source code included in Axon Cloud Services, or allow others to do the same;

b. copy, modify, tamper with, repair, or create derivative works of any part of Axon Cloud Services;

c. access or use Axon Cloud Services with the intent to gain unauthorized access, avoid incurring fees or exceeding usage limits or quotas;

d. use Axon Cloud Serves as a service bureau, or as part of an Customer infrastructure as a service;

e. use trade secret information contained in Axon Cloud Services, except as expressly permitted in this Agreement;

f. access Axon Cloud Services to build a competitive device or service or copy any features, functions, or graphics of Axon Cloud Services;

g. remove, alter, or obscure any confidentiality or proprietary rights notices (including copyright and trademark notices) of Axon's or Axon's licensors on or within Axon Cloud Services; or

h. use Axon Cloud Services to store or transmit infringing, libelous, or other unlawful or tortious material; material in violation of third-party privacy rights; or malicious code.

**Axon Narrative.** AI-Assisted Report Writing feature. Axon may impose usage restrictions if a single user generates more than one hundred (100) reports per month for two or more consecutive months.

**After Termination**. Axon will not delete Customer Content for ninety (90) days following termination. There will be no functionality of Axon Cloud Services during these ninety (90) days other than the ability to retrieve Customer Content. Customer will not incur additional fees if Customer downloads Customer Content from Axon Cloud Services during this time. Axon has no obligation to maintain or provide Customer Content after these ninety (90) days and will thereafter, unless legally prohibited, delete all Customer Content. Upon request, Axon will provide written proof that Axon successfully deleted and fully removed all Customer Content from Axon Cloud Services.

**Post-Termination Assistance**. Axon will provide Customer with the same post-termination data retrieval assistance that Axon generally makes available to all customers. Requests for Axon to provide additional assistance in downloading or transferring Customer Content, including requests for Axon's data egress service, will result in additional fees and Axon will not warrant or guarantee data integrity or readability in the external system.

**U.S. Government Rights**. If Customer is a U.S. Federal department or using Axon Cloud Services on behalf of a U.S. Federal department, Axon Cloud Services is provided as a "commercial item," "commercial computer software," "commercial computer software documentation," and "technical data", as defined in the Federal Acquisition Regulation and Defense Federal Acquisition Regulation Supplement. If Customer is using Axon Cloud Services on behalf of the U.S. Government and these terms fail to meet the U.S. Government's needs or are inconsistent in any respect with federal law, Customer will immediately discontinue use of Axon Cloud Services.

**Survival**. Upon any termination of this Agreement, the following sections in this Appendix will survive: Customer Owns Customer Content, Privacy, Storage, Axon Cloud Services Warranty, Customer Responsibilities and Axon Cloud Services Restrictions.

**Axon Enterprise, Inc.**
17800 N 85th St.
Scottsdale, Arizona 85255
United States
VAT: 86-0741227
Domestic: (800) 978-2737
International: +1.800.978.2737

**Q-616420-45560.916RS**

Issued: 09/25/2024

Quote Expiration: 11/30/2024

Estimated Contract Start Date: 03/01/2025

Account Number: 121103

Payment Terms:

Delivery Method:

| SHIP TO | BILL TO |
|---|---|
| Blanco County Sheriff's Office - TX<br>400 S US Highway 281<br>Johnson City,<br>TX<br>78636-4647<br>USA | Blanco County Sheriff's Office - TX<br>400 S US Highway 281<br>Johnson City<br>TX<br>78636-4647<br>USA<br>Email: |

| SALES REPRESENTATIVE | PRIMARY CONTACT |
|---|---|
| Ryan Sabo<br>Phone: (480) 716-3516<br>Email: rsabo@axon.com<br>Fax: | Adam Acosta<br>Phone: (830) 868-7104<br>Email: aacosta@co.blanco.tx.us<br>Fax: |

## Quote Summary

| | |
|---|---|
| Program Length | 60 Months |
| **TOTAL COST** | $34,125.00 |
| **ESTIMATED TOTAL W/ TAX** | $34,125.00 |

## Discount Summary

| | |
|---|---|
| Average Savings Per Year | $2,076.48 |
| **TOTAL SAVINGS** | $10,382.40 |

## Payment Summary

| Date | Subtotal | Tax | Total |
|---|---|---|---|
| Feb 2025 | $6,825.00 | $0.00 | $6,825.00 |
| Feb 2026 | $6,825.00 | $0.00 | $6,825.00 |
| Feb 2027 | $6,825.00 | $0.00 | $6,825.00 |
| Feb 2028 | $6,825.00 | $0.00 | $6,825.00 |
| Feb 2029 | $6,825.00 | $0.00 | $6,825.00 |
| **Total** | **$34,125.00** | **$0.00** | **$34,125.00** |

| | |
|---|---|
| **Quote Unbundled Price:** | **$44,507.40** |
| **Quote List Price:** | **$34,120.80** |
| **Quote Subtotal:** | **$34,125.00** |

## Pricing

***All deliverables are detailed in Delivery Schedules section lower in proposal***

| Item | Description | Qty | Term | Unbundled | List Price | Net Price | Subtotal | Tax | Total |
|---|---|---|---|---|---|---|---|---|---|
| **Program** | | | | | | | | | |
| C00010 | BUNDLE - TASER 10 CERTIFICATION | 7 | 60 | $105.97 | $81.24 | $81.25 | $34,125.00 | $0.00 | $34,125.00 |
| **Total** | | | | | | | **$34,125.00** | **$0.00** | **$34,125.00** |

## Delivery Schedule

### Hardware

| Bundle | Item | Description | QTY | Shipping Location | Estimated Delivery Date |
|---|---|---|---|---|---|
| BUNDLE - TASER 10 CERTIFICATION | 100390 | AXON TASER 10 - HANDLE - YELLOW CLASS 3R | 7 | 2 | 03/01/2025 |
| BUNDLE - TASER 10 CERTIFICATION | 100393 | AXON TASER 10 - MAGAZINE - LIVE DUTY BLACK | 7 | 1 | 03/01/2025 |
| BUNDLE - TASER 10 CERTIFICATION | 100394 | AXON TASER 10 - MAGAZINE - HALT TRAINING BLUE | 4 | 1 | 03/01/2025 |
| BUNDLE - TASER 10 CERTIFICATION | 100395 | AXON TASER 10 - MAGAZINE - LIVE TRAINING PURPLE | 3 | 1 | 03/01/2025 |
| BUNDLE - TASER 10 CERTIFICATION | 100396 | AXON TASER 10 - MAGAZINE - INERT RED | 7 | 1 | 03/01/2025 |
| BUNDLE - TASER 10 CERTIFICATION | 100399 | AXON TASER 10 - CARTRIDGE - LIVE | 140 | 1 | 03/01/2025 |
| BUNDLE - TASER 10 CERTIFICATION | 100400 | AXON TASER 10 - CARTRIDGE - HALT | 50 | 1 | 03/01/2025 |
| BUNDLE - TASER 10 CERTIFICATION | 100401 | AXON TASER 10 - CARTRIDGE - INERT | 70 | 1 | 03/01/2025 |
| BUNDLE - TASER 10 CERTIFICATION | 100611 | AXON TASER 10 - SAFARILAND HOLSTER - RH | 7 | 1 | 03/01/2025 |
| BUNDLE - TASER 10 CERTIFICATION | 100623 | AXON TASER - TRAINING - ENHANCED HALT SUIT V2 | 1 | 1 | 03/01/2025 |
| BUNDLE - TASER 10 CERTIFICATION | 20018 | AXON TASER - BATTERY PACK - TACTICAL | 2 | 1 | 03/01/2025 |
| BUNDLE - TASER 10 CERTIFICATION | 20018 | AXON TASER - BATTERY PACK - TACTICAL | 7 | 1 | 03/01/2025 |
| BUNDLE - TASER 10 CERTIFICATION | 70033 | AXON - DOCK WALL MOUNT - BRACKET ASSY | 1 | 1 | 03/01/2025 |
| BUNDLE - TASER 10 CERTIFICATION | 71019 | AXON BODY - DOCK POWERCORD - NORTH AMERICA | 1 | 1 | 03/01/2025 |
| BUNDLE - TASER 10 CERTIFICATION | 74200 | AXON TASER - DOCK - SIX BAY PLUS CORE | 1 | 1 | 03/01/2025 |
| BUNDLE - TASER 10 CERTIFICATION | 80087 | AXON TASER - TARGET - CONDUCTIVE PROFESSIONAL RUGGEDIZED | 1 | 1 | 03/01/2025 |
| BUNDLE - TASER 10 CERTIFICATION | 80090 | AXON TASER - TARGET FRAME - PROFESSIONAL 27.5 IN X 75 IN | 1 | 1 | 03/01/2025 |
| BUNDLE - TASER 10 CERTIFICATION | 100399 | AXON TASER 10 - CARTRIDGE - LIVE | 30 | 1 | 03/01/2026 |
| BUNDLE - TASER 10 CERTIFICATION | 100400 | AXON TASER 10 - CARTRIDGE - HALT | 60 | 1 | 03/01/2026 |
| BUNDLE - TASER 10 CERTIFICATION | 100399 | AXON TASER 10 - CARTRIDGE - LIVE | 20 | 1 | 03/01/2027 |
| BUNDLE - TASER 10 CERTIFICATION | 100400 | AXON TASER 10 - CARTRIDGE - HALT | 60 | 1 | 03/01/2027 |
| BUNDLE - TASER 10 CERTIFICATION | 100399 | AXON TASER 10 - CARTRIDGE - LIVE | 20 | 1 | 03/01/2028 |
| BUNDLE - TASER 10 CERTIFICATION | 100400 | AXON TASER 10 - CARTRIDGE - HALT | 50 | 1 | 03/01/2028 |
| BUNDLE - TASER 10 CERTIFICATION | 100399 | AXON TASER 10 - CARTRIDGE - LIVE | 20 | 1 | 03/01/2029 |
| BUNDLE - TASER 10 CERTIFICATION | 100400 | AXON TASER 10 - CARTRIDGE - HALT | 60 | 1 | 03/01/2029 |

### Software

| Bundle | Item | Description | QTY | Estimated Start Date | Estimated End Date |
|---|---|---|---|---|---|

## Software

| Bundle | Item | Description | QTY | Estimated Start Date | Estimated End Date |
|---|---|---|---|---|---|
| BUNDLE - TASER 10 CERTIFICATION | 101180 | AXON TASER - DATA SCIENCE PROGRAM | 7 | 03/01/2025 | 02/28/2030 |
| BUNDLE - TASER 10 CERTIFICATION | 20248 | AXON TASER - EVIDENCE.COM LICENSE | 1 | 03/01/2025 | 02/28/2030 |
| BUNDLE - TASER 10 CERTIFICATION | 20248 | AXON TASER - EVIDENCE.COM LICENSE | 7 | 03/01/2025 | 02/28/2030 |

## Services

| Bundle | Item | Description | QTY |
|---|---|---|---|
| BUNDLE - TASER 10 CERTIFICATION | 100751 | AXON TASER 10 - REPLACEMENT ACCESS PROGRAM - DUTY CARTRIDGE | 7 |
| BUNDLE - TASER 10 CERTIFICATION | 101193 | AXON TASER - ON DEMAND CERTIFICATION | 1 |

## Warranties

| Bundle | Item | Description | QTY | Estimated Start Date | Estimated End Date |
|---|---|---|---|---|---|
| BUNDLE - TASER 10 CERTIFICATION | 100704 | AXON TASER 10 - EXT WARRANTY - HANDLE | 7 | 03/01/2026 | 02/28/2030 |
| BUNDLE - TASER 10 CERTIFICATION | 80374 | AXON TASER - EXT WARRANTY - BATTERY PACK T7/T10 | 2 | 03/01/2026 | 02/28/2030 |
| BUNDLE - TASER 10 CERTIFICATION | 80374 | AXON TASER - EXT WARRANTY - BATTERY PACK T7/T10 | 7 | 03/01/2026 | 02/28/2030 |
| BUNDLE - TASER 10 CERTIFICATION | 80396 | AXON TASER - EXT WARRANTY - DOCK SIX BAY T7/T10 | 1 | 03/01/2026 | 02/28/2030 |

## Shipping Locations

| Location Number | Street | City | State | Zip | Country |
|---|---|---|---|---|---|
| 1 | 400 S US Highway 281 | Johnson City | TX | 78636-4647 | USA |
| 2 | 400 S US Highway 281 | Johnson City | TX | 78636-4647 | USA |

## Payment Details

### Feb 2025

| Invoice Plan | Item | Description | Qty | Subtotal | Tax | Total |
|---|---|---|---|---|---|---|
| Year 1 | C00010 | BUNDLE - TASER 10 CERTIFICATION | 7 | $6,825.00 | $0.00 | $6,825.00 |
| **Total** | | | | **$6,825.00** | **$0.00** | **$6,825.00** |

### Feb 2026

| Invoice Plan | Item | Description | Qty | Subtotal | Tax | Total |
|---|---|---|---|---|---|---|
| Year 2 | C00010 | BUNDLE - TASER 10 CERTIFICATION | 7 | $6,825.00 | $0.00 | $6,825.00 |
| **Total** | | | | **$6,825.00** | **$0.00** | **$6,825.00** |

### Feb 2027

| Invoice Plan | Item | Description | Qty | Subtotal | Tax | Total |
|---|---|---|---|---|---|---|
| Year 3 | C00010 | BUNDLE - TASER 10 CERTIFICATION | 7 | $6,825.00 | $0.00 | $6,825.00 |
| **Total** | | | | **$6,825.00** | **$0.00** | **$6,825.00** |

### Feb 2028

| Invoice Plan | Item | Description | Qty | Subtotal | Tax | Total |
|---|---|---|---|---|---|---|
| Year 4 | C00010 | BUNDLE - TASER 10 CERTIFICATION | 7 | $6,825.00 | $0.00 | $6,825.00 |
| **Total** | | | | **$6,825.00** | **$0.00** | **$6,825.00** |

### Feb 2029

| Invoice Plan | Item | Description | Qty | Subtotal | Tax | Total |
|---|---|---|---|---|---|---|
| Year 5 | C00010 | BUNDLE - TASER 10 CERTIFICATION | 7 | $6,825.00 | $0.00 | $6,825.00 |
| **Total** | | | | **$6,825.00** | **$0.00** | **$6,825.00** |

**Tax is estimated based on rates applicable at date of quote and subject to change at time of invoicing. If a tax exemption certificate should be applied, please submit prior to invoicing.**

## Standard Terms and Conditions

Axon Enterprise Inc. Sales Terms and Conditions

Axon Master Services and Purchasing Agreement:

This Quote is limited to and conditional upon your acceptance of the provisions set forth herein and Axon's Master Services and Purchasing Agreement (posted at https://www.axon.com/sales-terms-and-conditions), as well as the attached Statement of Work (SOW) for Axon Fleet and/or Axon Interview Room purchase, if applicable. In the event you and Axon have entered into a prior agreement to govern all future purchases, that agreement shall govern to the extent it includes the products and services being purchased and does not conflict with the Axon Customer Experience Improvement Program Appendix as described below.

ACEIP:

The Axon Customer Experience Improvement Program Appendix, which includes the sharing of de-identified segments of Agency Content with Axon to develop new products and improve your product experience (posted at www.axon.com/legal/sales-terms-and-conditions), is incorporated herein by reference. By signing below, you agree to the terms of the Axon Customer Experience Improvement Program.

Acceptance of Terms:

Any purchase order issued in response to this Quote is subject solely to the above referenced terms and conditions. By signing below, you represent that you are lawfully able to enter into contracts. If you are signing on behalf of an entity (including but not limited to the company, municipality, or government agency for whom you work), you represent to Axon that you have legal authority to bind that entity. If you do not have this authority, please do not sign this Quote.

Signature

Date Signed

9/25/2024

**Thirteenth Amendment to the Master Services and Purchasing Agreement**

This Thirteenth Amendment **("Amendment")** is between Axon Enterprise, Inc. (f/k/a Taser International, Inc.), a Delaware corporation **("Axon"),** and Blanco County **("Agency").** This Amendment is effective as of the last signature date on this Amendment **("Effective Date").** Axon and Agency are each a **"Party"** and collectively **"Parties".**

On September 7, 2017, the Parties entered into Master Services and Purchasing Agreement under Quote 123431, as amended by the First Amendment dated March 14, 2018, the Second Amendment dated February 10, 2021, the Third Amendment dated February 15, 2023, the Fourth Amendment dated March 17, 2023, the Fifth Amendment dated August 16, 2023, the Sixth Amendment dated November 22, 2023, the Seventh Amendment dated December 20, 2023, the Eighth Amendment dated January 9, 2024, the Nineth Amendment dated February 8, 2024, the Tenth Amendment dated November 2024, the Eleventh Amendment dated November 2024, and the Twelfth Amendment dated July 2024 **("Agreement").**

The Parties wish to incorporate further changes into the Agreement in order to expand the scope of offered products.

The Parties therefore agree as follows:

1. The attached documents are hereby incorporated into the Agreement:
   a. Technology Assurance Plan Appendix; Attachment A
   b. Events Appendix; Attachment B
   c. Quote# Q-616493-45560.91RS; Attachment C

2. All other terms and conditions of the Agreement shall remain unchanged and in full force and effect.

Each representative identified below declares that the representative is authorized to execute this Amendment as of the date of signature.

| **Axon Enterprise, Inc.** | **Blanco County (TX)** |
|---|---|
| Signature: _____ | Signature: _____ |
| Name: _____ | Name: _____ |
| Title: _____ | Title: _____ |
| Date: _____ | Date: _____ |

COPY

**Attachment A:**

## Technology Assurance Plan Appendix

If Technology Assurance Plan ("**TAP**") or a bundle including TAP is on the Quote, this appendix applies.

1. **TAP Warranty**. The TAP warranty is an extended warranty that starts at the end of the one- (1-) year hardware limited warranty.

2. **Officer Safety Plan**. If Customer purchases an Officer Safety Plan ("**OSP**"), Customer will receive the deliverables detailed in the Quote. Customer must accept delivery of the TASER CEW and accessories as soon as available from Axon.

3. **OSP 7 or OSP 10 Term**. OSP 7 or OSP 10 begins on the date specified in the Quote ("**OSP Term**").

4. **TAP BWC Upgrade**. If Customer has no outstanding payment obligations and purchased TAP, Axon will provide Customer a new Axon body-worn camera ("**BWC Upgrade**") as scheduled in the Quote. If Customer purchased TAP, Axon will provide a BWC Upgrade that is the same or like Axon Device, at Axon's option. Axon makes no guarantee the BWC Upgrade will utilize the same accessories or Axon dock.

5. **TAP Dock Upgrade**. If Customer has no outstanding payment obligations and purchased TAP, Axon will provide Customer a new Axon Dock as scheduled in the Quote ("**Dock Upgrade**"). Accessories associated with any Dock Upgrades are subject to change at Axon discretion. Dock Upgrades will only include a new Axon dock bay configuration unless a new Axon dock core is required for BWC compatibility. If Customer originally purchased a single-bay Axon dock, the Dock Upgrade will be a single-bay Axon dock model that is the same or like Axon Device, at Axon's option. If Customer originally purchased a multi-bay Axon dock, the Dock Upgrade will be a multi-bay Axon dock that is the same or like Axon Device, at Axon's option.

6. **Upgrade Delay**. Axon may ship the BWC and Dock Upgrades as scheduled in the Quote without prior confirmation from Customer unless the Parties agree in writing otherwise at least ninety (90) days in advance. Axon may ship the final BWC and Dock Upgrade as scheduled in the Quote sixty (60) days before the end of the Subscription Term without prior confirmation from Customer.

7. **Upgrade Change**. If Customer wants to upgrade Axon Device models from the current Axon Device to an upgraded Axon Device, Customer must pay the price difference between the MSRP for the current Axon Device and the MSRP for the upgraded Axon Device. If the model Customer desires has an MSRP less than the MSRP of the offered BWC Upgrade or Dock Upgrade, Axon will not provide a refund. The MSRP is the MSRP in effect at the time of the upgrade.

8. **Return of Original Axon Device**. Within thirty (30) days of receiving a BWC or Dock Upgrade, Customer must return the original Axon Devices to Axon or destroy the Axon Devices and provide a certificate of destruction to Axon including serial numbers for the destroyed Axon Devices. If Customer does not return or destroy the Axon Devices, Axon will deactivate the serial numbers for the Axon Devices received by Customer.

COPY

9. **Termination**. If Customer's payment for TAP, OSP, or Axon Evidence is more than thirty (30) days past due, Axon may terminate TAP or OSP. Once TAP or OSP terminates for any reason:

   9.1. TAP and OSP coverage terminate as of the date of termination and no refunds will be given.

   9.2. Axon will not and has no obligation to provide the Upgrade Models.

   9.3. Customer must make any missed payments due to the termination before Customer may purchase any future TAP or OSP.

**Attachment B:**

# Axon Event Offer Appendix

If the Agreement includes the provision of, or Axon otherwise offers, ticket(s), travel and/or accommodation for select events hosted by Axon ("Axon Event"), the following shall apply:

1. **General**. Subject to the terms and conditions specified below and those in the Agreement, Axon may provide Customer with one or more offers to fund Axon Event ticket(s), travel and/or accommodation for Customer-selected employee(s) to attend one or more Axon Events. By entering into the Agreement, Customer warrants that it is appropriate and permissible for Customer to receive the referenced Axon Event offer(s) based on Customer's understanding of the terms and conditions outlined in this Axon Event Offer Appendix.

2. **Attendee/Employee Selection**. Customer shall have sole and absolute discretion to select the Customer employee(s) eligible to receive the ticket(s), travel and/or accommodation that is the subject of any Axon Event offer(s).

3. **Compliance**. It is the intent of Axon that any and all Axon Event offers comply with all applicable laws, regulations and ethics rules regarding contributions, including gifts and donations. Axon's provision of ticket(s), travel and/or accommodation for the applicable Axon Event to Customer is intended for the use and benefit of Customer in furtherance of its goals, and not the personal use or benefit of any official or employee of Customer. Axon makes this offer without seeking promises or favoritism for Axon in any bidding arrangements. Further, no exclusivity will be expected by either party in consideration for the offer. Axon makes the offer with the understanding that it will not, as a result of such offer, be prohibited from any procurement opportunities or be subject to any reporting requirements. If Customer's local jurisdiction requires Customer to report or disclose the fair market value of the benefits provided by Axon, Customer shall promptly contact Axon to obtain such information, and Axon shall provide the information necessary to facilitate Customer's compliance with such reporting requirements.

4. **Assignability**. Customer may not sell, transfer, or assign Axon Event ticket(s), travel and/or accommodation provided under the Agreement.

5. **Availability.** The provision of all offers of Axon Event ticket(s), travel and/or accommodation is subject to availability of funds and resources. Axon has no obligation to provide Axon Event ticket(s), travel and/or accommodation.

6. **Revocation of Offer**. Axon reserves the right at any time to rescind the offer of Axon Event ticket(s), travel and/or accommodation to Customer if Customer or its selected employees fail to meet the prescribed conditions or if changes in circumstances render the provision of such benefits impractical, inadvisable, or in violation of any applicable laws, regulations, and ethics rules regarding contributions, including gifts and donations

COPY

**Axon Enterprise, Inc.**
17800 N 85th St.
Scottsdale, Arizona 85255
United States
VAT: 86-0741227
Domestic: (800) 978-2737
International: +1.800.978.2737

**Q-616493-45560.918RS**

Issued: 09/25/2024

Quote Expiration: 11/30/2024

Estimated Contract Start Date: 02/01/2025

Account Number: 121103

Payment Terms: N30

Delivery Method:

| SHIP TO | BILL TO |
|---|---|
| Blanco County Sheriff's Office - TX<br>400 S US Highway 281<br>Johnson City,<br>TX<br>78636-4647<br>USA | Blanco County Sheriff's Office - TX<br>400 S US Highway 281<br>Johnson City<br>TX<br>78636-4647<br>USA<br>Email: |

| SALES REPRESENTATIVE | PRIMARY CONTACT |
|---|---|
| Ryan Sabo<br>Phone: (480) 716-3516<br>Email: rsabo@axon.com<br>Fax: | Bill Elsbury<br>Phone: (830) 868-7104<br>Email:<br>Fax: (830) 868-4577 |

COPY

## Quote Summary

| | |
|---|---|
| Program Length | 60 Months |
| **TOTAL COST** | $17,519.10 |
| **ESTIMATED TOTAL W/ TAX** | $17,519.10 |

## Discount Summary

| | |
|---|---|
| Average Savings Per Year | $680.28 |
| **TOTAL SAVINGS** | $3,401.40 |

## Payment Summary

| Date | Subtotal | Tax | Total |
|---|---|---|---|
| Jan 2025 | $6,708.54 | $0.00 | $6,708.54 |
| Jan 2026 | $2,702.64 | $0.00 | $2,702.64 |
| Jan 2027 | $2,702.64 | $0.00 | $2,702.64 |
| Jan 2028 | $2,702.64 | $0.00 | $2,702.64 |
| Jan 2029 | $2,702.64 | $0.00 | $2,702.64 |
| **Total** | **$17,519.10** | **$0.00** | **$17,519.10** |

COPY

| | |
|---|---|
| Quote Unbundled Price: | $20,920.50 |
| Quote List Price: | $17,522.70 |
| Quote Subtotal: | $17,519.10 |

## Pricing

***All deliverables are detailed in Delivery Schedules section lower in proposal***

| Item | Description | Qty | Term | Unbundled | List Price | Net Price | Subtotal | Tax | Total |
|---|---|---|---|---|---|---|---|---|---|
| **Program** | | | | | | | | | |
| BWCamMBDTAP | Body Worn Camera Multi-Bay Dock TAP Bundle | 1 | 60 | $73.05 | $36.07 | $36.07 | $2,164.20 | $0.00 | $2,164.20 |
| BWCamTAP | Body Worn Camera TAP Bundle | 3 | 60 | $40.35 | $33.80 | $33.80 | $6,084.00 | $0.00 | $6,084.00 |
| **A la Carte Hardware** | | | | | | | | | |
| AB3MBD | AB3 Multi Bay Dock Bundle | 1 | | | $1,638.90 | $1,638.90 | $1,638.90 | $0.00 | $1,638.90 |
| AB3C | AB3 Camera Bundle | 3 | | | $789.00 | $789.00 | $2,367.00 | $0.00 | $2,367.00 |
| **A la Carte Software** | | | | | | | | | |
| 73683 | AXON EVIDENCE - STORAGE - 10GB A LA CARTE | 60 | 60 | | $0.65 | $0.65 | $2,340.00 | $0.00 | $2,340.00 |
| BasicLicense | Basic License Bundle | 3 | 60 | | $16.27 | $16.25 | $2,925.00 | $0.00 | $2,925.00 |
| Total | | | | | | | $17,519.10 | $0.00 | $17,519.10 |

COPY

## Delivery Schedule

### Hardware

| Bundle | Item | Description | QTY | Shipping Location | Estimated Delivery Date |
|---|---|---|---|---|---|
| AB3 Camera Bundle | 11534 | AXON BODY - CABLE - USB-C TO USB-A (AB3 OR FLEX 2) | 4 | 1 | 01/01/2025 |
| AB3 Camera Bundle | 73202 | AXON BODY 3 - CAMERA - NA10 US BLK RAPIDLOCK | 3 | 1 | 01/01/2025 |
| AB3 Camera Bundle | 74028 | AXON BODY - MOUNT - WING CLIP RAPIDLOCK | 4 | 1 | 01/01/2025 |
| AB3 Multi Bay Dock Bundle | 70033 | AXON - DOCK WALL MOUNT - BRACKET ASSY | 1 | 1 | 01/01/2025 |
| AB3 Multi Bay Dock Bundle | 71019 | AXON BODY - DOCK POWERCORD - NORTH AMERICA | 1 | 1 | 01/01/2025 |
| AB3 Multi Bay Dock Bundle | 74210 | AXON BODY 3 - DOCK - EIGHT BAY | 1 | 1 | 01/01/2025 |
| Body Worn Camera Multi-Bay Dock TAP Bundle | 73689 | AXON BODY - TAP REFRESH 1 - DOCK MULTI BAY | 1 | 1 | 07/01/2027 |
| Body Worn Camera TAP Bundle | 73309 | AXON BODY - TAP REFRESH 1 - CAMERA | 3 | 1 | 07/01/2027 |
| Body Worn Camera Multi-Bay Dock TAP Bundle | 73688 | AXON BODY - TAP REFRESH 2 - DOCK MULTI BAY | 1 | 1 | 01/01/2030 |
| Body Worn Camera TAP Bundle | 73310 | AXON BODY - TAP REFRESH 2 - CAMERA | 3 | 1 | 01/01/2030 |

### Software

| Bundle | Item | Description | QTY | Estimated Start Date | Estimated End Date |
|---|---|---|---|---|---|
| Basic License Bundle | 73683 | AXON EVIDENCE - STORAGE - 10GB A LA CARTE | 3 | 02/01/2025 | 01/31/2030 |
| Basic License Bundle | 73840 | AXON EVIDENCE - ECOM LICENSE - BASIC | 3 | 02/01/2025 | 01/31/2030 |
| A la Carte | 73683 | AXON EVIDENCE - STORAGE - 10GB A LA CARTE | 60 | 02/01/2025 | 01/31/2030 |

### Warranties

| Bundle | Item | Description | QTY | Estimated Start Date | Estimated End Date |
|---|---|---|---|---|---|

## Warranties

| Bundle | Item | Description | QTY | Estimated Start Date | Estimated End Date |
|---|---|---|---|---|---|
| Body Worn Camera Multi-Bay Dock TAP Bundle | 80465 | AXON BODY - TAP WARRANTY - MULTI BAY DOCK | 1 | 01/01/2026 | 01/31/2030 |
| Body Worn Camera TAP Bundle | 80464 | AXON BODY - TAP WARRANTY - CAMERA | 3 | 01/01/2026 | 01/31/2030 |

COPY

## Shipping Locations

| Location Number | Street | City | State | Zip | Country |
|---|---|---|---|---|---|
| 1 | 400 S US Highway 281 | Johnson City | TX | 78636-4647 | USA |

## Payment Details

### Jan 2025

| Invoice Plan | Item | Description | Qty | Subtotal | Tax | Total |
|---|---|---|---|---|---|---|
| Upfront Hardware | AB3C | AB3 Camera Bundle | 3 | $2,367.00 | $0.00 | $2,367.00 |
| Upfront Hardware | AB3MBD | AB3 Multi Bay Dock Bundle | 1 | $1,638.90 | $0.00 | $1,638.90 |
| Year 1 | 73683 | AXON EVIDENCE - STORAGE - 10GB A LA CARTE | 60 | $468.00 | $0.00 | $468.00 |
| Year 1 | BasicLicense | Basic License Bundle | 3 | $584.99 | $0.00 | $584.99 |
| Year 1 | BWCamMBDTAP | Body Worn Camera Multi-Bay Dock TAP Bundle | 1 | $432.85 | $0.00 | $432.85 |
| Year 1 | BWCamTAP | Body Worn Camera TAP Bundle | 3 | $1,216.80 | $0.00 | $1,216.80 |
| **Total** | | | | **$6,708.54** | **$0.00** | **$6,708.54** |

### Feb 2025

| Invoice Plan | Item | Description | Qty | Subtotal | Tax | Total |
|---|---|---|---|---|---|---|
| Invoice Upon Fulfillment | BWCamMBDTAP | Body Worn Camera Multi-Bay Dock TAP Bundle | 1 | $0.00 | $0.00 | $0.00 |
| Invoice Upon Fulfillment | BWCamTAP | Body Worn Camera TAP Bundle | 3 | $0.00 | $0.00 | $0.00 |
| **Total** | | | | **$0.00** | **$0.00** | **$0.00** |

### Jan 2026

| Invoice Plan | Item | Description | Qty | Subtotal | Tax | Total |
|---|---|---|---|---|---|---|
| Year 2 | 73683 | AXON EVIDENCE - STORAGE - 10GB A LA CARTE | 60 | $468.00 | $0.00 | $468.00 |
| Year 2 | BasicLicense | Basic License Bundle | 3 | $584.99 | $0.00 | $584.99 |
| Year 2 | BWCamMBDTAP | Body Worn Camera Multi-Bay Dock TAP Bundle | 1 | $432.85 | $0.00 | $432.85 |
| Year 2 | BWCamTAP | Body Worn Camera TAP Bundle | 3 | $1,216.80 | $0.00 | $1,216.80 |
| **Total** | | | | **$2,702.64** | **$0.00** | **$2,702.64** |

### Jan 2027

| Invoice Plan | Item | Description | Qty | Subtotal | Tax | Total |
|---|---|---|---|---|---|---|
| Year 3 | 73683 | AXON EVIDENCE - STORAGE - 10GB A LA CARTE | 60 | $468.00 | $0.00 | $468.00 |
| Year 3 | BasicLicense | Basic License Bundle | 3 | $584.99 | $0.00 | $584.99 |
| Year 3 | BWCamMBDTAP | Body Worn Camera Multi-Bay Dock TAP Bundle | 1 | $432.85 | $0.00 | $432.85 |
| Year 3 | BWCamTAP | Body Worn Camera TAP Bundle | 3 | $1,216.80 | $0.00 | $1,216.80 |
| **Total** | | | | **$2,702.64** | **$0.00** | **$2,702.64** |

### Jan 2028

| Invoice Plan | Item | Description | Qty | Subtotal | Tax | Total |
|---|---|---|---|---|---|---|
| Year 4 | 73683 | AXON EVIDENCE - STORAGE - 10GB A LA CARTE | 60 | $468.00 | $0.00 | $468.00 |
| Year 4 | BasicLicense | Basic License Bundle | 3 | $584.99 | $0.00 | $584.99 |
| Year 4 | BWCamMBDTAP | Body Worn Camera Multi-Bay Dock TAP Bundle | 1 | $432.85 | $0.00 | $432.85 |
| Year 4 | BWCamTAP | Body Worn Camera TAP Bundle | 3 | $1,216.80 | $0.00 | $1,216.80 |
| **Total** | | | | **$2,702.64** | **$0.00** | **$2,702.64** |

COPY

## Jan 2029

| Invoice Plan | Item | Description | Qty | Subtotal | Tax | Total |
|---|---|---|---|---|---|---|
| Year 5 | 73683 | AXON EVIDENCE - STORAGE - 10GB A LA CARTE | 60 | $468.00 | $0.00 | $468.00 |
| Year 5 | BasicLicense | Basic License Bundle | 3 | $584.99 | $0.00 | $584.99 |
| Year 5 | BWCamMBDTAP | Body Worn Camera Multi-Bay Dock TAP Bundle | 1 | $432.85 | $0.00 | $432.85 |
| Year 5 | BWCamTAP | Body Worn Camera TAP Bundle | 3 | $1,216.80 | $0.00 | $1,216.80 |
| **Total** | | | | **$2,702.64** | **$0.00** | **$2,702.64** |

COPY

**Tax is estimated based on rates applicable at date of quote and subject to change at time of invoicing. If a tax exemption certificate should be applied, please submit prior to invoicing.**

## Standard Terms and Conditions

Axon Enterprise Inc. Sales Terms and Conditions

Axon Master Services and Purchasing Agreement:

This Quote is limited to and conditional upon your acceptance of the provisions set forth herein and Axon's Master Services and Purchasing Agreement (posted at https://www.axon.com/sales-terms-and-conditions), as well as the attached Statement of Work (SOW) for Axon Fleet and/or Axon Interview Room purchase, if applicable. In the event you and Axon have entered into a prior agreement to govern all future purchases, that agreement shall govern to the extent it includes the products and services being purchased and does not conflict with the Axon Customer Experience Improvement Program Appendix as described below.

ACEIP:

The Axon Customer Experience Improvement Program Appendix, which includes the sharing of de-identified segments of Agency Content with Axon to develop new products and improve your product experience (posted at www.axon.com/legal/sales-terms-and-conditions), is incorporated herein by reference. By signing below, you agree to the terms of the Axon Customer Experience Improvement Program.

Acceptance of Terms:

Any purchase order issued in response to this Quote is subject solely to the above referenced terms and conditions. By signing below, you represent that you are lawfully able to enter into contracts. If you are signing on behalf of an entity (including but not limited to the company, municipality, or government agency for whom you work), you represent to Axon that you have legal authority to bind that entity. If you do not have this authority, please do not sign this Quote.

Signature

Date Signed

9/25/2024

COPY

SUSTAINABLE
SECURITY SOLUTIONS

October 31, 2024

Cost Proposal

**Blanco County Sheriff's Office**
**Attn: Lt. Julie Bussey**

**RE: Blanco County Jail – Replacement Food Pass Hinges**

We are pleased to provide your firm with a Proposal on the following in accordance with our clarifications and exclusions listed below:

**Clarifications:**

1. We will remove seventeen (17) existing food pass hinges and prep the door for new food pass hinges.
2. We will furnish and install thirty-four (34) new Food Pass hinges (2 per food pass) on existing doors.
    - Hinges include a 90-degree integral stop
    - We will touch up all welds with primer
    - Food pass hinges will have a primer finish
    - Finish painting by others

## Base Bid

Lump Sum: $7,997.00

No Tax/No Bond

**Exclusions:**

1. Submittal drawings
2. Payment retention
3. Taxes
4. Bond and bond premium
5. All building permits and fees
6. The cost of drug testing employees other than required by Sustainable Security Solutions drug free policy.

**Terms and Conditions:**

1. Our price is based upon receiving a standard form Purchase Order containing mutually agreeable terms and conditions. We reserve the right to withdraw our bid, without recourse, prejudice or damage to Sustainable Security Solutions, in the absence of a mutually agreeable Purchase Order.


1107 Basse Road San Antonio, TX 78212
Phone 210.714.3015 Fax 210.714.5364

SUSTAINABLE
SECURITY SOLUTIONS

2. This scope letter or any subsequent revised scope letter produced by Sustainable Security Solutions shall become a part of any Purchase Order for this project.
3. Payment terms are Net 30 from date of Invoice.

If you should require any further information, please do not hesitate to contact me.

Sincerely,

Todd Clark
Sustainable Security Solutions

**Accepted By:**

_____

**Purchase Order Number:**

_____


1107 Basse Road San Antonio, TX 78212
Phone 210.714.3015 Fax 210.714.5364

# Retail Purchase Order

RDO Equipment Co.
17301 IH-35 Ste 200
Buda TX, 78610
Phone: (737) 770-5100 - Fax:

**Bill To:**
BLANCO COUNTY - A/P
PO BOX 471
JOHNSON CITY, TX, 786360471
BLANCO ()
(830) 833-1077

| | |
|---|---|
| **Purchase Order Date:** | 10/17/2024 |
| **Purchase Order #:** | 1765461 |
| **Purchaser Account #:** | 8880782 |
| **Customer Purchaser Type:** | Governmental - County |
| **Customer Market Use:** | Other - Recycling |
| **Location of First Working Use:** | JOHNSON CITY, TX, 786360471 |
| **Dealer Account Number:** | 177431 |
| **Sales Professional:** | Peter Arcos |
| **Phone:** | (830) 632-3145 |
| **Fax:** | |
| **Email:** | parcos@rdoequipment.com |

## Comments

Level 4 Package 0507: Seat, Deluxe Air Ride, Heated, High Back (Cloth) Attachment Assist Control Package Three Function Control Valve (3-Spool), Automatic Reversing Hydraulic Fan, High Flow Hydraulic Pump

## Equipment Information

| Quantity | Serial Number<br>Stock Number | Hours<br>(approx.) | Status / Year / Make / Model<br>Additional Items | Cash Price |
|---|---|---|---|---|
| 1 | TBD<br>TBD | 0 | New 2024 JOHN DEERE 324P | $173,315.00 |
| | | | 01H0T 324 P-Tier Compact Wheel Loader<br>0202 United States of America<br>0259 Operator's Manual, English<br>0452 High Lift Z-Bar Linkage<br>0507 Level 4 Package<br>3003 Hydrostat With Two Speed Synchronized Shift-On-Fly Transmission - High Speed<br>4062 YANMAR 4TNV98CT FT4/EU STAGE V<br>5362 405/70R20 Mitas EM-01<br>6052 Halogen Work Lights<br>AT413238 2.1 cu. yd. (1.6 cu. m.) Light Material Bucket (Quik-Tatch)<br>BYT13142 LED Amber Beacon Light<br>AT412608 Skid Steer Compatible Quik-Tatch Coupler<br>BYT10470 Skid Steer Quik-Tatch Coupler Cover<br>AT337325 Rotary Intake Pre-Cleaner | |
| | | | Freight in Factory Freight | $4,500.00 |
| | | | Freight Out | $900.00 |
| | | | Customer Discount Sourcewell Discount 26% | ($45,061.90) |
| | | | Prep / Reconditioning | $1,800.00 |
| | | | Warranty -John Deere Power Train & Hyd.-48 Months, 1200 Hours,Deductible: 0, Exp Date: 4/16/2028 | $1,419.74 |
| | | | **Item Subtotal:** | **$136,872.84** |
| | | | **Equipment Subtotal:** | **$136,872.84** |

Copy

## Purchase Order Totals

| | |
|---|---|
| **Balance:** | $136,872.84 |
| **Total Taxable Amount:** | $0.00 |
| **TX STATE TAX:** | $0.00 |
| **TX COUNTY TAX:** | $0.00 |
| **TX SPECIAL TAX:** | $0.00 |
| **Sales Tax Total:** | $0.00 |
| **Sub Total:** | $136,872.84 |
| **Cash with Order:** | $0.00 |
| **Balance Due:** | **$136,872.84** |

## Legal Information

For the Construction Product(s)

**ACKNOWLEDGMENTS -** Purchaser offers to sell, transfer, and convey the item(s) listed as "Trade In" to the Dealer at or prior to the time of delivery of the above Product(s), as a "trade-in" to be applied against the cash price. Purchaser represents that each "trade-in" item shall be free and clear of all security interests, liens, and encumbrances at the time of transfer to the Dealer except to the extent shown below. The price to be allowed for each "trade-in" item is listed on this document. The Purchaser promises to pay the balance due shown hereon in cash, or to execute a Time Sale Agreement (Retail Installment Contract), or a Loan Agreement for the purchase price of the Product(s), plus additional charges shown thereon, or to execute a Lease Agreement, on or before delivery of the Product(s) ordered herein. Despite delivery of the Product(s) to the Purchaser, title shall remain with the Seller until one of the foregoing is accomplished. Except as provided herein and as necessary to protect RDO Equipment from the claims or a bankruptcy trustee or a buyer in the ordinary course or business, the Purchaser and the Dealer agree that this Purchase Order is not a security agreement and that delivery of the Product(s) to the Purchaser pursuant to this Purchase Order will not constitute possession of the Product(s) by the Purchaser, as a debtor, for the purposes of the purchase money security provisions in any statutes relating to personal property security or its equivalent. Purchaser understands that its rights in connection with this purchase are limited as set forth in this Purchase Order. I (we) hereby grant a security interest to RDO Equipment in the Product.

**DISCLOSURE OF REGULATION APPLICABILITY -** When operated in California, any off-road diesel vehicle may be subject to the California Air Resources Board In-Use Off-Road Diesel Vehicle Regulation. It therefore could be subject to retrofit or accelerated turnover requirements to reduce emissions of air pollutants. More information is available on the California Air Resources Board website at http://www.arb.ca.gov/msprog/ordiesel/ordiesel.htm.

**IMPORTANT WARRANTY NOTICE -** The Standard Warranty for new John Deere construction and forestry products is set forth in a separate document provided by the dealer.Please read the Standard Warranty carefully before signing. No express warranty is made unless specified in the Warranty Statement. PURCHASER'S RIGHTS AND REMEDIES PERTAINING TO THIS PURCHASE ARE LIMITED AS INDICATED IN THE STANDARD WARRANTY AND PURCHASE ORDER. WHERE PERMITTED BY LAW, NO IMPLIED WARRANTY OF MERCHANTABILITY OR FITNESS IS MADE.

Telematics: Orders of telematic devices include only the hardware. Where available, telematics software, including JDLink™ connectivity service, may be enabled from your local John Deere Operations Center or JDLink website. Please see your authorized John Deere dealer for assistance.

The undersigned purchaser(s) (the "Purchaser") hereby orders the product (the "Product") described above from the Dealer. The Dealer shall not be liable for failure to provide the Product or for any delay in delivery if such failure or delay is due to the Dealer's inability to obtain such Product from the manufacturer or supplier or other cause beyond the Dealer's control. The cash price shown above is subject to the Dealer receiving the Product from the manufacturer or supplier prior to any change in price by the manufacturer or supplier and is also subject to any new or increased taxes being imposed upon the sale of the Product after the date of this Purchase Order.

Upon signature of delivery acknowledgment, customer is accepting the equipment, including attachments, in "AS IS" condition, agreeing to notify RDO Equipment Co. within 24 hours of any damages or discrepancies found upon receipt of equipment.

## Signature Area

**Purchase Order Accepted By:**

(Customer's Signature) (Date Accepted)

(Authorized Signature of Dealer) (Date Accepted)

**Delivery of Equipment Acknowledgement:**

(Customer's Signature) Date Accepted

(Account Manager's Signature) Date Accepted

**Standard Warranty Acknowledgement:**

(Delivered On) (Warranty Begins) (Customer's Intials) (Account Manager's Initials)

**Extended Warranty Oil Sampling Acknowledgement:**

(Customer's Initials) (Account Manager's Initials)

# 324 P

## Compact Wheel Loader

JOHN DEERE

# RUN SMALL, DREAM BIG

Your workday is usually long, your tasks can take you into tight places, and you need a multipurpose machine to get everything done. Smaller do-it-all equipment that combines head-turning maneuverability, sure-footed stability, and comfortable capability with productive power, responsive travel speed, and ease of serviceability. Meet the 324 P-Tier Compact Wheel Loader, designed to include a wide range of reliable standard features and proven options that help you imagine the big results this highly adaptable multitasker can deliver for your operation.

## FEATURES

**Turn things around**
Industry-exclusive Articulation Plus™ steering system combines 30 degrees of articulation with 10 additional degrees of rear-wheel steer. Reduced articulation angle design delivers tighter turns that are more stable, especially with large loads, than comparatively sized loaders without Articulation Plus.

**On the level**
Loader arm and coupler design improves the lifting path to near parallel — for better load-carrying capability than previous models. This keeps the load more level from ground to truck-bed height and helps the operator focus on the task instead of on making manual adjustments.

**Lift, reach, repeat**
With exceptional lift and height to hinge pin, the optional High-Lift configuration makes the 324 P-Tier especially adept at repetitive dumping and stacking applications.

**Fast getaway**
With a standard top speed of over 23 mph, the 324 P-Tier can make some pretty quick moves on and between jobsites.

**Control and command**
Low-effort joystick controls boom and bucket, forward-neutral-reverse (F-N-R), and differential lock. Standard mini-joystick controls auxiliary hydraulic functions including optional high-flow. Adjustable-height monitor lets operators keep close watch on vital machine functions.

**Enjoy the ride**
Standard ride control cushions the boom during travel over rough and uneven terrain, reducing material spillage from the bucket and minimizing site cleanup.

**Lighten up**
In-cab lighting activates when the door is opened to illuminate machine entrances and exits. Optional LED front and rear work-lights brilliantly brighten early morning or after-daylight tasks.

**Smooth moves**
Load-sensing AutoShift power-train technology eliminates productivity-interrupting manual shifts between gear ranges while providing smooth direction changes.

**Quick-change artist**
Equip your 324 P-Tier with an ISO coupler to quickly and easily go from bucket to forks, for maximum lift capacity. Opt for the available John Deere quick-coupler to utilize a wide array of skid-steer-compatible attachments. High-flow electro-hydraulic-controlled auxiliary hydraulics are also available.

**It's a lock**
Optional throttle lock and creep control let operators set a slow ground speed while maintaining full engine power to an attach-ment. Now even easier to activate and adjust on the fly, these functions are perfect for work with snow blowers, cold planers, or material scrapers.

**Get a grip**
Manual low-speed 100-percent differential lock delivers the ground-gripping tractive effort needed to dive deep into the pile and help heap the bucket. Rimpull control manages power to the wheels, allowing the operator to select the optimal setting to reduce tire and driveline wear.

## OPTIONAL LED
### FRONT & REAR WORKLIGHTS ENHANCE VISIBILITY

**Keep your cool**
Redesigned engine compartment and cooling package improve airflow and reduce the amount of debris entering the system compared to previous models. Access to all daily service checks and cooler cores is from ground level.

**Business booster**
John Deere attachments are a great way to expand the flexibility of your operation. With more than 100 models, they'll help you broaden your abilities, work smarter, and accomplish even more.

**Here to back you up**
Parts and service are always available at over 1,400 John Deere dealer locations throughout North America.

# 324 P-TIER WHEEL LOADER SPECIFICATIONS

While general information, pictures, and descriptions are provided, some illustrations and text may include product options and accessories NOT AVAILABLE in all regions, and in some countries products and accessories may require modifications or additions to ensure compliance with the local regulations of those countries.

| **Engine** | **324 P-TIER** | | |
|---|---|---|---|
| Manufacturer and Model | Yanmar 4TNV98CT | Gross Rated Power at 2,400 rpm (ISO 14396) | 54 kW (73 hp) |
| Non-Road Emission Standard | EPA Final Tier 4/EU Stage V | Peak Torque at 1,560 rpm | 280 Nm (206 lb.-ft.) |
| Cylinders | 4 | Engine Bore and Stroke | 98 x 110 mm (3.89 x 4.33 in.) |
| Valves per Cylinder | 4 | Lubrication | Pressure system with full-flow spin-on filter |
| Displacement | 3.3 L (203 cu. in.) | Aspiration | Turbocharged |
| Net Peak Power at 2,400 rpm (SAE J1349 / ISO 9249) | 52 kW (71 hp) | Air Cleaner | Dual safety element dry type |

| **Cooling** | |
|---|---|
| Fan | Hydraulically driven, proportionally controlled |
| Engine Coolant Rating | –37 deg. C (–34 deg. F) |

| **Powertrain** | |
|---|---|
| Type | Hydrostatic (HST) with infinitely variable speed control over full range of operating speeds; 2 speed ranges; joystick-mounted F-N-R; acceleration pedal; HST inching pedal, which allows infinitely reduced travel speeds while maintaining full engine rpm and hydraulic flow |
| 2 Travel Speeds in Forward and Reverse (equipped with 405/70R20 tires) | |
| Gear 1 | 18 km/h (11.0 mph) |
| Gear 2 | 38 km/h (23.5 mph) |
| **Axles** | Fixed, 100% differential, manually engaged front axle; fixed, conventional differential rear axle |
| Rear Axle Oscillation Versus Front Axle | 16 deg. total, stop to stop |
| **Differentials** | Manual (push-button) 100% locking front, conventional rear |
| Maximum Rise and Fall, Single Wheel | 370 mm (14.5 in.) |
| **Steering** | Hydraulic power steering (SAE J1511); 30-deg. articulation left and right with mechanical-actuated rear-wheel steering |
| Steering Wheel Turns, Stop to Stop | 4¼ (2 left / 2¼ right) |
| Articulation Angle | 60-deg. arc (30 deg. each direction) |
| **Final Drive** | Heavy-duty outboard planetary |
| **Brakes** (SAE J1473 / ISO 3450) | |
| Service Brakes | Hydraulically actuated, self-adjusting internal wet-disc brake and driveline drum brake |
| Parking Brake | Automatically spring-applied, hydraulically released, internal wet disc |

| **Hydraulics** | | | |
|---|---|---|---|
| **Main Pump (loader and steering)** | Fixed-displacement gear pump; open-center system | | |
| Standard | 93 L/m (25 gpm) | **Hydraulic Cycle Times** | |
| Total With High-Flow Option | 132 L/m (35 gpm) | Raise | 5.6 sec. |
| Maximum Pressure at Couplings | 21 000 kPa (3,045 psi) | Dump | 2.0 sec. |
| **System Relief Pressure** | | Lower | 4.4 sec. |
| Loader | 18 960 kPa (2,750 psi) | Total | 12.0 sec. |
| Steering | 18 000 kPa (2,611 psi) | | |
| **Controls** | Pilot-operated, 3-function valve with single-lever control for boom and bucket, standard pin disconnect and 3rd-function proportional electrohydraulic (EH) auxiliary hydraulics | | |

| **Cylinders** | |
|---|---|
| Type | Heat-treated, chrome-plated, polished cylinder rods; hardened steel (replaceable bushings) pivot pins |

| **Electrical** | |
|---|---|
| Type | Electrical load center with blade-type multi-fused circuits |
| Voltage | 12 volt |
| Number of Batteries | 1 |
| Battery Capacity | 925 CCA |
| Alternator Rating | 80 amp |
| **Lights (SAE 99)** | Driving/front working lights (2), turn signals, flashers, and stop- and taillights |

| **Operator Station** | |
|---|---|
| **Noise Level** | |
| Operator Ear (ISO 6396) | 68 dBA |
| Bystander (ISO 6395) | 101 dBA |

| **Tires/Wheels** | | | |
|---|---|---|---|
| **Tires on Single-Piece Rims** | *Tread Width** | *Width Over Tires*† | *Change in Vertical Height* |
| 405/70R20 Mitas EM-01 (standard) | 1630 mm (5 ft. 4 in.) | 2090 mm (6 ft. 10 in.) | 0 mm (0 in.) |
| 405/70R18 Firestone Duraforce (optional) | 1630 mm (5 ft. 4 in.) | 2090 mm (6 ft. 10 in.) | –27 mm (–1.0 in.) |
| 400/70R20 Michelin XMCL (optional) | 1630 mm (5 ft. 4 in.) | 2090 mm (6 ft. 10 in.) | –6 mm (–0 in.) |
| 400/70R20 Michelin Bibload (optional) | 1630 mm (5 ft. 4 in.) | 2080 mm (6 ft. 10 in.) | –12 mm (–0 in.) |
| 400/70R20 Nokian Hakkapeliitta (optional) | 1630 mm (5 ft. 4 in.) | 2080 mm (6 ft. 10 in.) | –2 mm (–0 in.) |

**Also see **Q** in **Dimensions** section on pages 7 and 9. / †Also see **R** in **Dimensions** section on pages 7 and 9.*

| **Serviceability** | | | |
|---|---|---|---|
| **Refill Capacities** | | **Refill Capacities** *(continued)* | |
| Cooling System (engine and radiator) | 12.1 L (12.7 qt.) | Fuel Tank | 90 L (23.8 gal.) |
| Differential and Planetary Axle | | Hydraulic/HST Reservoir With Filter | 66 L (17.4 gal.) |
| Front | 7.4 L (7.8 qt.) | HST Motor Gearbox | 1.7 L (1.8 qt.) |
| Rear | 6.8 L (7.2 qt.) | Front/Rear Axle Planetary Hubs (each) | 0.8 L (1.0 qt.) |
| Engine Oil With Filter | 10 L (10.8 qt.) | | |

# 324 P-TIER WHEEL LOADER SPECIFICATIONS

While general information, pictures, and descriptions are provided, some illustrations and text may include product options and accessories NOT AVAILABLE in all regions, and in some countries products and accessories may require modifications or additions to ensure compliance with the local regulations of those countries.

| Operating Weights | 324 P-TIER |
|---|---|
| With standard equipment, 405/70R20 tires, standard counterweight, cab, 79-kg (175 lb.) operator, and full fuel tank | |
| ISO Quick-Coupler | |
| With 1.1-m³ (1.4 cu. yd.) General-Purpose (GP) Bucket With Bolt-On Edge | 6400 kg (14,110 lb.) |
| With 1.6-m³ (2.1 cu. yd.) GP Bucket With Bolt-On Edge | 6465 kg (14,253 lb.) |
| With Fork | 6175 kg (13,614 lb.) |
| Quik-Tatch™ Quick-Coupler | |
| With 1.1-m³ (1.4 cu. yd.) GP Bucket With Bolt-On Edge | 6590 kg (14,528 lb.) |
| With 1.6-m³ (2.1 cu. yd.) GP Bucket With Bolt-On Edge | 6675 kg (14,716 lb.) |
| With Fork | 6290 kg (13,867 lb.) |
| **Optional Components** | |
| ISO Quick-Coupler | |
| 0.8-m³ (1.0 cu. yd.) GP Bucket With Bolt-On Edge | 337 kg (743 lb.) |

| Optional Components *(continued)* | |
|---|---|
| ISO Quick-Coupler *(continued)* | |
| 1.1-m³ (1.4 cu. yd.) GP Bucket With Bolt-On Edge | 457 kg (1,008 lb.) |
| 1.6-m³ (2.1 cu. yd.) Light-Material Bucket With Bolt-On Edge | 520 kg (1,146 lb.) |
| Fork Frame and Forks (Class 2) | 240 kg (511 lb.) |
| Quik-Tatch Quick-Coupler | |
| 0.8-m³ (1.0 cu. yd.) GP Bucket With Bolt-On Edge | 535 kg (1,179 lb.) |
| 1.1-m³ (1.4 cu. yd.) GP Bucket With Bolt-On Edge | 645 kg (1,421 lb.) |
| 1.6-m³ (2.1 cu. yd.) Light-Material Bucket With Bolt-On Edge | 730 kg (1,609 lb.) |
| Fork Frame and Severe-Duty (SD) Forks (Class 3B) | 336 kg (741 lb.) |

## Dimensions and Specifications With ISO Quick-Coupler and Bucket

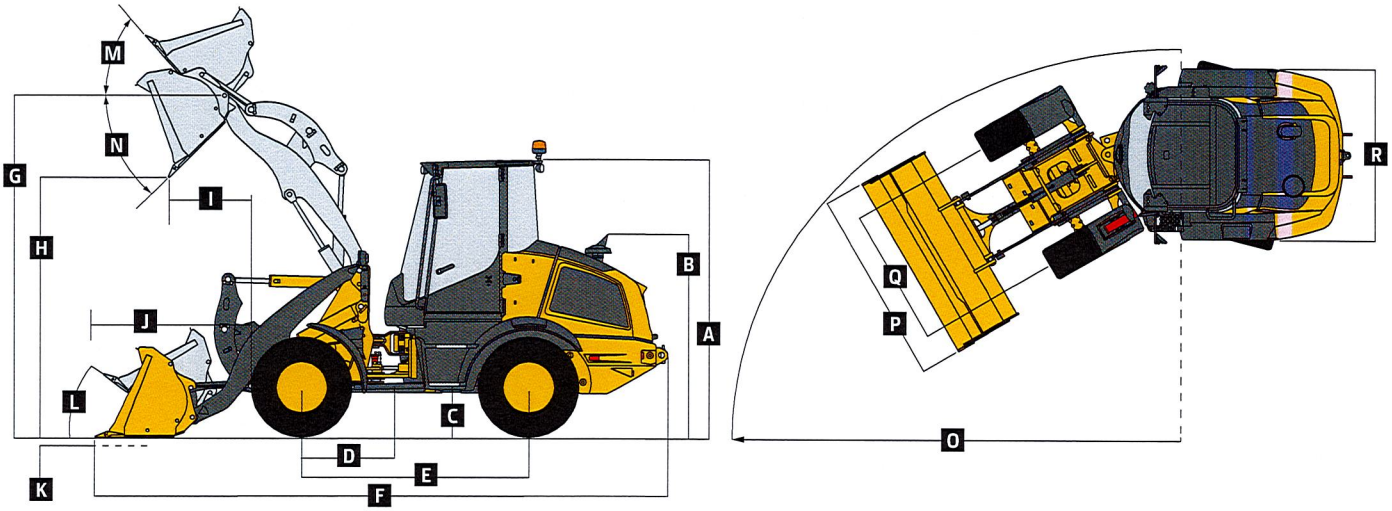


### 324 P-TIER STANDARD-LINKAGE / HIGH-LIFT-LINKAGE LOADERS WITH ISO QUICK-COUPLER AND BUCKET

| | Dimensions With ISO Quick-Coupler and Bucket With Bolt-On Edge | *Standard Linkage* *1.1-m³ (1.4 cu. yd.) GP* | *Standard Linkage* *1.6-m³ (2.1 cu. yd.) light material* | *High-Lift Linkage* *0.8-m³ (1.0 cu. yd.) GP* | *High-Lift Linkage* *1.6-m³ (2.1 cu. yd.) light material* |
|---|---|---|---|---|---|
| A | Height to Top of Cab | 2.78 m (9 ft. 1 in.) | 2.78 m (9 ft. 1 in.) | 2.78 m (9 ft. 1 in.) | 2.78 m (9 ft. 1 in.) |
| B | Height to Top of Exhaust | 2.01 m (6 ft. 7 in.) | 2.01 m (6 ft. 7 in.) | 2.01 m (6 ft. 7 in.) | 2.01 m (6 ft. 7 in.) |
| C | Ground Clearance | 295 mm (12 in.) | 295 mm (12 in.) | 295 mm (12 in.) | 295 mm (12 in.) |
| D | Length From Centerline to Front Axle | 750 mm (30 in.) | 750 mm (30 in.) | 750 mm (30 in.) | 750 mm (30 in.) |
| E | Wheelbase | 2.30 m (7 ft. 7 in.) | 2.30 m (7 ft. 7 in.) | 2.30 m (7 ft. 7 in.) | 2.30 m (7 ft. 7 in.) |
| F | Overall Length, Bucket on Ground | 5.65 m (18 ft. 6 in.) | 5.83 m (19 ft. 1 in.) | 6.03 m (19 ft. 9 in.) | 6.21 m (20 ft. 4 in.) |
| G | Height to Hinge Pin, Fully Raised | 3.35 m (11 ft. 0 in.) | 3.35 m (11 ft. 0 in.) | 3.79 m (12 ft. 5 in.) | 3.79 m (12 ft. 5 in.) |
| H | Dump Clearance, 42-deg.[Δ] Full Height | 2.61 m (8 ft. 7 in.) | 2.52 m (8 ft. 3 in.) | 3.13 m (10 ft. 3 in.) | 3.00 m (9 ft. 10 in.) |
| I | Reach, 42-deg.[Δ] Dump, Full Height | 920 mm (3 ft. 0 in.) | 950 mm (3 ft. 1 in.) | 865 mm (34 in.) | 934 mm (3 ft. 1 in.) |
| J | Maximum Dump Reach, 42-deg. Dump | 1.66 m (5 ft. 5 in.) | 1.69 m (5 ft. 6 in.) | 1.93 m (6 ft. 4 in.) | 2.00 m (6 ft. 7 in.) |
| K | Maximum Digging Depth | 90 mm (3.5 in.) | 90 mm (3.5 in.) | 97 mm (3.8 in.) | 97 mm (3.8 in.) |
| L | Maximum Rollback at Ground Level | 40 deg. | 40 deg. | 40 deg. | 40 deg. |
| M | Maximum Rollback at Full Height | 55 deg. | 55 deg. | 54 deg. | 54 deg. |
| N | Bucket Dump at Full Height | 42 deg. | 42 deg. | 38 deg. | 38 deg. |
| O | Turning Circle Radius Over Outside of Bucket Edge | 4.14 m (13 ft. 7 in.) | 4.28 m (14 ft. 0 in.) | 4.21 m (13 ft. 10 in.) | 4.49 m (14 ft. 9 in.) |
| P | Bucket Width | 2.20 m (7 ft. 3 in.) | 2.40 m (7 ft. 10 in.) | 1.90 m (6 ft. 3 in.) | 2.40 m (7 ft. 10 in.) |
| Q | Tread Width (standard)[§] | 1630 mm (5 ft. 4 in.) | 1630 mm (5 ft. 4 in.) | 1630 mm (5 ft. 4 in.) | 1630 mm (5 ft. 4 in.) |
| R | Width Over Tires (standard)[§] | 2090 mm (6 ft. 10 in.) | 2090 mm (6 ft. 10 in.) | 2090 mm (6 ft. 10 in.) | 2090 mm (6 ft. 10 in.) |
| | Loader Clearance Circle, Bucket Carry Position | 8.28 m (27 ft. 2 in.) | 8.55 m (28 ft. 1 in.) | 8.42 m (27 ft. 7 in.) | 8.98 m (29 ft. 6 in.) |

[Δ]*38 deg. for High-Lift Linkage.*

[§]*Also see **Tires/Wheels** section on page 6.*

# 324 P-TIER

While general information, pictures, and descriptions are provided, some illustrations and text may include product options and accessories NOT AVAILABLE in all regions, and in some countries products and accessories may require modifications or additions to ensure compliance with the local regulations of those countries.

| Dimensions and Specifications With ISO Quick-Coupler and Bucket *(continued)* | 324 P-TIER | | | |
|---|---|---|---|---|
| | *Standard Linkage* | *Standard Linkage* | *High-Lift Linkage* | *High-Lift Linkage* |
| **Specifications With ISO Quick-Coupler and Bucket With Bolt-On Edge** | *1.1-m³ (1.4 cu. yd.) general purpose (GP)* | *1.6-m³ (2.1 cu. yd.) light material* | *0.8-m³ (1.0 cu. yd.) GP* | *1.6-m³ (2.1 cu. yd.) light material* |
| Capacity, Heaped (SAE) | 1.1 m³ (1.4 cu. yd.) | 1.6 m³ (2.1 cu. yd.) | 0.8 m³ (1.0 cu. yd.) | 1.6 m³ (2.1 cu. yd.) |
| Capacity, Struck (SAE) | 0.9 m³ (1.2 cu. yd.) | 1.4 m³ (1.8 cu. yd.) | 0.66 m³ (0.86 cu. yd.) | 1.4 m³ (1.8 cu. yd.) |
| Breakout Force (SAE J732C) | 5650 kg (12,456 lb.) | 5180 kg (11,420 lb.) | 6000 kg (13,228 lb.) | 5160 kg (11,376 lb.) |
| Tipping Load, Straight | 4850 kg (10,692 lb.) | 4750 kg (10,472 lb.) | 4280 kg (9,436 lb.) | 4040 kg (8,907 lb.) |
| Tipping Load, Full Turn (SAE) | 4430 kg (9,766 lb.) | 4320 kg (9,524 lb.) | 3890 kg (8,576 lb.) | 3670 kg (8,091 lb.) |
| Rated Operating Load, 50% of Full-Turn Tipping Load (conforms to ISO 14397-1)* | 2215 kg (4,883 lb.) | 2160 kg (4,762 lb.) | 1945 kg (4,288 lb.) | 1835 kg (4,045 lb.) |

**Rated operating capacity based on Deere attachments only.*

## Dimensions and Specifications With ISO Quick-Coupler and Fork

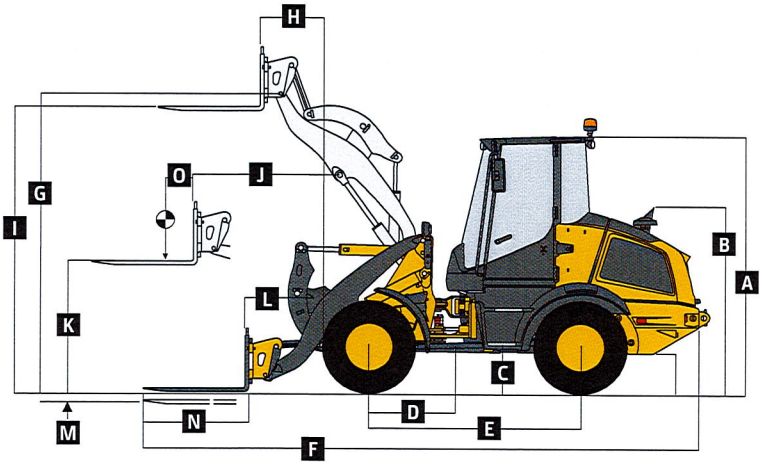


**324 P-TIER STANDARD-LINKAGE / HIGH-LIFT-LINKAGE LOADERS WITH ISO QUICK-COUPLER AND FORK**

| | | *Standard Linkage* | *High-Lift Linkage* |
|---|---|---|---|
| | **Dimensions With ISO Quick-Coupler and Fork** | *1.20-m (48 in.) tine length* | *1.20-m (48 in.) tine length* |
| A | Height to Top of Cab | 2.78 m (9 ft. 1 in.) | 2.78 m (9 ft. 1 in.) |
| B | Height to Top of Exhaust | 2.01 m (6 ft. 7 in.) | 2.01 m (6 ft. 7 in.) |
| C | Ground Clearance | 295 mm (12 in.) | 295 mm (12 in.) |
| D | Length From Centerline to Front Axle | 750 mm (30 in.) | 750 mm (30 in.) |
| E | Wheelbase | 2.30 m (7 ft. 7 in.) | 2.30 m (7 ft. 7 in.) |
| F | Overall Length, Forks on Ground | 6.23 m (20 ft. 5 in.) | 6.62 m (21 ft. 9 in.) |
| G | Height to Hinge Pin, Fully Raised | 3.35 m (11 ft. 0 in.) | 3.79 m (12 ft. 5 in.) |
| H | Reach, Fully Raised | 570 mm (22 in.) | 500 mm (20 in.) |
| I | Fork Height, Fully Raised | 3.18 m (10 ft. 5 in.) | 3.62 m (11 ft. 10 in.) |
| J | Maximum Reach, Fork Level | 1.33 m (4 ft. 4 in.) | 1.34 m (4 ft. 5 in.) |
| K | Fork Height, Maximum Reach | 1.49 m (4 ft. 11 in.) | 1.49 m (4 ft. 11 in.) |
| L | Reach, Ground Level | 815 mm (32 in.) | 1200 mm (4 ft. 0 in.) |
| M | Depth Below Ground | 65 mm (2.6 in.) | 85 mm (3.3 in.) |
| N | Tine Length | 1.20 m (48 in.) | 1.20 m (48 in.) |
| O | Load Position, 50% Tine Length | 600 mm (24 in.) | 600 mm (24 in.) |
| | **Specifications With ISO Quick-Coupler and Fork** | *As measured with fork level, centered on tine* | *As measured with fork level, centered on tine* |
| | Tipping Load, Straight | 3840 kg (8,466 lb.) | 3400 kg (7,496 lb.) |
| | Tipping Load, Full Turn (SAE) | 3500 kg (7,716 lb.) | 3090 kg (6,812 lb.) |
| | Rated Operating Load, 50% Full-Turn Tipping Load (conforms to SAE J1197 / ISO 14397-1)* | 1750 kg (3,858 lb.)† | 1545 kg (3,406 lb.)† |
| | Rated Operating Load, Rough Terrain, 60% Full-Turn Tipping Load (conforms to EN474-3)* | 2100 kg (4,630 lb.)† | 1850 kg (4,079 lb.)† |
| | Rated Operating Load, Firm and Level Ground, 80% Full-Turn Tipping Load (conforms to EN474-3)* | 2500 kg (5,512 lb.)†§ | 2470 kg (5,445 lb.)† |

**Rated operating capacity based on Deere attachments only. / †Payload on forks is limited by tilt cylinder.*
*§2,500-kg (5,512 lb.) maximum load capacity for the fork carrier (for standard linkage only).*

While general information, pictures, and descriptions are provided, some illustrations and text may include product options and accessories NOT AVAILABLE in all regions, and in some countries products and accessories may require modifications or additions to ensure compliance with the local regulations of those countries.

# 324 P-TIER

## Dimensions and Specifications
## With Quik-Tatch™ Coupler and Bucket 324 P-TIER

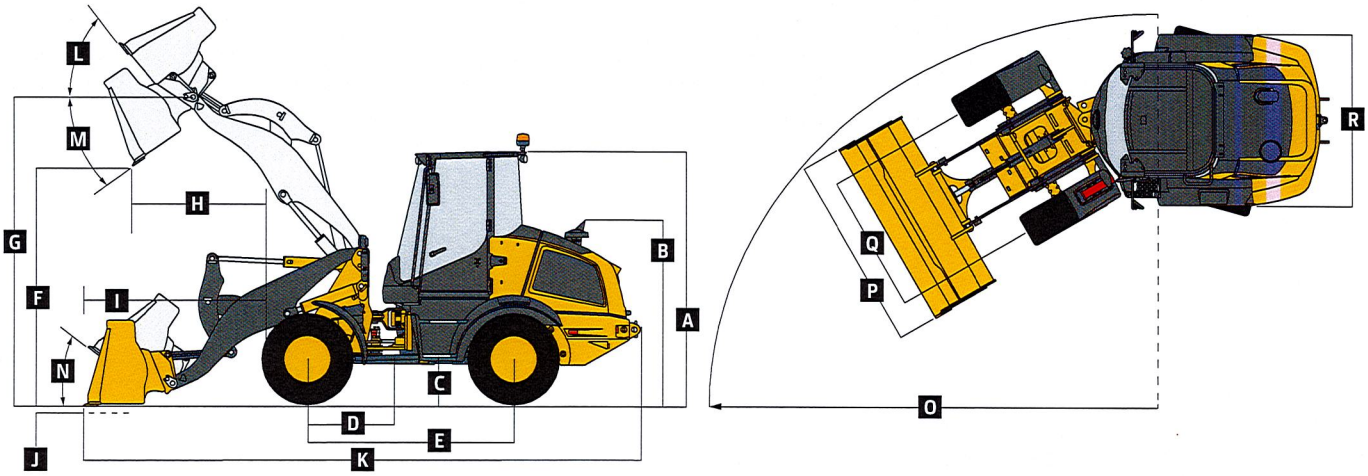


### 324 P-TIER STANDARD-LINKAGE / HIGH-LIFT-LINKAGE LOADERS WITH QUIK-TATCH COUPLER AND BUCKET

| | | *Standard Linkage* | *Standard Linkage* | *High-Lift Linkage* | *High-Lift Linkage* |
|---|---|---|---|---|---|
| | **Dimensions With Quik-Tatch Coupler and Bucket With Bolt-On Edge** | *1.1-m³ (1.4 cu. yd.) general purpose (GP)* | *1.6-m³ (2.1 cu. yd.) light material* | *0.8-m³ (1.0 cu. yd.) GP* | *1.6-m³ (2.1 cu. yd.) light material* |
| **A** | Height to Top of Cab | 2.78 m (9 ft. 1 in.) | 2.78 m (9 ft. 1 in.) | 2.78 m (9 ft. 1 in.) | 2.78 m (9 ft. 1 in.) |
| **B** | Height to Top of Exhaust | 2.01 m (6 ft. 7 in.) | 2.01 m (6 ft. 7 in.) | 2.01 m (6 ft. 7 in.) | 2.01 m (6 ft. 7 in.) |
| **C** | Ground Clearance | 295 mm (12 in.) | 295 mm (12 in.) | 295 mm (12 in.) | 295 mm (12 in.) |
| **D** | Length From Centerline to Front Axle | 750 mm (30 in.) | 750 mm (30 in.) | 750 mm (30 in.) | 750 mm (30 in.) |
| **E** | Wheelbase | 2.30 m (7 ft. 7 in.) | 2.30 m (7 ft. 7 in.) | 2.30 m (7 ft. 7 in.) | 2.30 m (7 ft. 7 in.) |
| **F** | Dump Clearance, 40-deg.[Δ] Full Height | 2.52 m (8 ft. 3 in.) | 2.45 m (8 ft. 0 in.) | 3.06 m (10 ft. 0 in.) | 2.95 m (9 ft. 8 in.) |
| **G** | Height to Hinge Pin, Fully Raised | 3.35 m (11 ft. 0 in.) | 3.35 m (11 ft. 0 in.) | 3.79 m (12 ft. 5 in.) | 3.79 m (12 ft. 5 in.) |
| **H** | Reach, 40-deg.[Δ] Dump, Full Height | 1.90 m (6 ft. 3 in.) | 1.99 m (6 ft. 6 in.) | 1.10 m (3 ft. 7 in.) | 1.26 m (4 ft. 2 in.) |
| **I** | Maximum Dump Reach, 42 deg. | 1.16 m (3 ft. 10 in.) | 1.26 m (4 ft. 1 in.) | 2.15 m (7 ft. 1 in.) | 2.40 m (7 ft. 10 in.) |
| **J** | Maximum Digging Depth | 69 mm (2.7 in.) | 69 mm (2.7 in.) | 80 mm (3.1 in.) | 80 mm (3.1 in.) |
| **K** | Overall Length, Bucket on Ground | 5.91 m (19 ft. 5 in.) | 6.04 m (19 ft. 10 in.) | 6.26 m (20 ft. 6 in.) | 6.45 m (21 ft. 2 in.) |
| **L** | Maximum Rollback at Full Height | 58 deg. | 58 deg. | 56 deg. | 56 deg. |
| **M** | Bucket Dump at Full Height | 40 deg. | 40 deg. | 42 deg. | 42 deg. |
| **N** | Maximum Rollback at Ground Level | 50 deg. | 50 deg. | 40 deg. | 40 deg. |
| **O** | Turning Circle Radius Over Outside of Bucket Edge | 4.19 m (13 ft. 9 in.) | 4.32 m (14 ft. 2 in.) | 4.26 m (14 ft. 0 in.) | 4.54 m (14 ft. 11 in.) |
| **P** | Bucket Width | 2.20 m (7 ft. 3 in.) | 2.40 m (7 ft. 10 in.) | 2.20 m (7 ft. 3 in.) | 2.40 m (7 ft. 10 in.) |
| **Q** | Tread Width (standard)[§] | 1630 mm (5 ft. 4 in.) | 1630 mm (5 ft. 4 in.) | 1630 mm (5 ft. 4 in.) | 1630 mm (5 ft. 4 in.) |
| **R** | Width Over Tires (standard)[§] | 2090 mm (6 ft. 10 in.) | 2090 mm (6 ft. 10 in.) | 2090 mm (6 ft. 10 in.) | 2090 mm (6 ft. 10 in.) |
| | Loader Clearance Circle, Bucket Carry Position | 8.37 m (27 ft. 6 in.) | 8.63 m (28 ft. 4 in.) | 8.52 m (27 ft. 11 in.) | 9.07 m (29 ft. 9 in.) |

*[Δ]35 deg. for High-Lift Linkage.*

*[§]Also see **Tires/Wheels** section on page 6.*

| **Specifications With Quik-Tatch Coupler and Bucket** | | | | |
|---|---|---|---|---|
| Capacity, Heaped (SAE) | 1.1 m³ (1.4 cu. yd.) | 1.6 m³ (2.1 cu. yd.) | 0.8 m³ (1.0 cu. yd.) | 1.6 m³ (2.1 cu. yd.) |
| Capacity, Struck (SAE) | 0.9 m³ (1.2 cu. yd.) | 1.4 m³ (1.8 cu. yd.) | 0.66 m³ (0.86 cu. yd.) | 1.4 m³ (1.8 cu. yd.) |
| Breakout Force (SAE J732C) | 4590 kg (10,119 lb.) | 3875 kg (8,543 lb.) | 5100 kg (11,244 lb.) | 3960 kg (8,730 lb.) |
| Tipping Load, Straight | 4625 kg (10,196 lb.) | 3520 kg (7,760 lb.) | 3685 kg (8,124 lb.) | 3450 kg (7,606 lb.) |
| Tipping Load, Full Turn (SAE) | 4200 kg (9,259 lb.) | 4100 kg (9,039 lb.) | 3350 kg (7,385 lb.) | 3140 kg (6,923 lb.) |
| Rated Operating Load, 50% of Full-Turn Tipping Load (conforms to ISO 14397-1)* | 2100 kg (4,630 lb.) | 2050 kg (4,519 lb.) | 1675 kg (3,693 lb.) | 1570 kg (3,461 lb.) |

**Rated operating capacity based on Deere attachments only.*

# 324 P-TIER

While general information, pictures, and descriptions are provided, some illustrations and text may include product options and accessories NOT AVAILABLE in all regions, and in some countries products and accessories may require modifications or additions to ensure compliance with the local regulations of those countries.

## Dimensions and Specifications With Quik-Tatch Coupler and Fork — 324 P-TIER

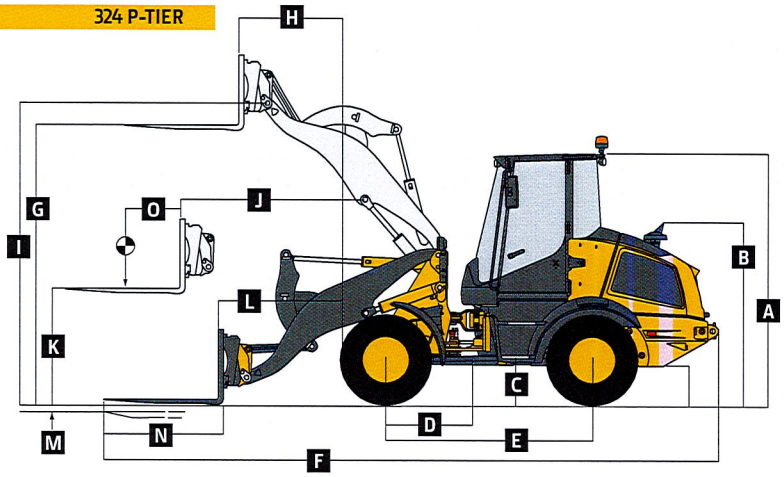


### 324 P-TIER STANDARD-LINKAGE / HIGH-LIFT-LINKAGE LOADERS WITH QUIK-TATCH COUPLER AND FORK

| | | *Standard Linkage* | *High-Lift Linkage* |
|---|---|---|---|
| | **Dimensions With Quik-Tatch Coupler and Fork** | *1.20-m (48 in.) tine length* | *1.20-m (48 in.) tine length* |
| A | Height to Top of Cab | 2.78 m (9 ft. 1 in.) | 2.78 m (9 ft. 1 in.) |
| B | Height to Top of Exhaust | 2.01 m (6 ft. 7 in.) | 2.01 m (6 ft. 7 in.) |
| C | Ground Clearance | 295 mm (12 in.) | 295 mm (12 in.) |
| D | Length From Centerline to Front Axle | 750 mm (30 in.) | 750 mm (30 in.) |
| E | Wheelbase | 2.30 m (7 ft. 7 in.) | 2.30 m (7 ft. 7 in.) |
| F | Overall Length, Forks on Ground | 6.30 m (20 ft. 8 in.) | 6.66 m (21 ft. 10 in.) |
| G | Height to Hinge Pin, Fully Raised | 3.35 m (11 ft. 0 in.) | 3.79 m (12 ft. 5 in.) |
| H | Reach, Fully Raised | 615 mm (24 in.) | 580 mm (23 in.) |
| I | Fork Height, Fully Raised | 3.15 m (10 ft. 4 in.) | 3.59 m (11 ft. 9 in.) |
| J | Maximum Reach, Fork Level | 1.37 m (4 ft. 6 in.) | 1.70 m (5 ft. 7 in.) |
| K | Fork Height, Maximum Reach | 1.46 m (4 ft. 9 in.) | 1.46 m (4 ft. 9 in.) |
| L | Reach, Ground Level | 855 mm (34 in.) | 1240 mm (4 ft. 1 in.) |
| M | Depth Below Ground | 95 mm (4 in.) | 110 mm (4.3 in.) |
| N | Tine Length | 1.20 m (48 in.) | 1.20 m (48 in.) |
| O | Load Position, 50% Tine Length | 600 mm (24 in.) | 600 mm (24 in.) |
| | **Specifications With Quik-Tatch Coupler and Fork** | *As measured with fork level, centered on tine* | |
| | Tipping Load, Straight | 3690 kg (8,135 lb.) | 3250 kg (7,165 lb.) |
| | Tipping Load, Full Turn (SAE) | 3350 kg (7,385 lb.) | 2960 kg (6,526 lb.) |
| | Rated Operating Load, 50% Full-Turn Tipping Load (conforms to SAE J1197 / ISO 14397-1)* | 1675 kg (3,693 lb.)† | 1480 kg (3,263 lb.)† |
| | Rated Operating Load, Rough Terrain, 60% Full-Turn Tipping Load (conforms to EN474-3)* | 2000 kg (4,409 lb.)† | 1770 kg (3,902 lb.)† |
| | Rated Operating Load, Firm and Level Ground, 80% Full-Turn Tipping Load (conforms to EN474-3)* | 2500 kg (5,512 lb.)†§ | 2370 kg (5,225 lb.)† |

**Rated operating capacity based on Deere attachments only.*
*†Payload on forks is limited by tilt cylinder.*
*§2,500-kg (5,512 lb.) maximum load capacity for the fork carrier (for standard linkage only).*

## Bucket Selection Guide

| LOOSE MATERIALS | kg/m³ | lb./cu. yd. | LOOSE MATERIALS | kg/m³ | lb./cu. yd. |
|---|---|---|---|---|---|
| Chips, pulpwood | 288 | 486 | Limestone, coarse, sized | 1570 | 2,646 |
| Cinders (coal, ashes, clinkers) | 673 | 1,134 | Limestone, mixed sizes | 1682 | 2,835 |
| Clay and gravel, dry | 1602 | 2,700 | Limestone, pulverized or crushed | 1362 | 2,295 |
| Clay, compact, solid | 1746 | 2,943 | Sand, damp | 2083 | 3,510 |
| Clay, dry in lump loose | 1009 | 1,701 | Sand, dry | 1762 | 2,970 |
| Clay, excavated in water | 1282 | 2,160 | Sand, voids, full of water | 2083 | 3,510 |
| Coal, anthracite, broken, loose | 865 | 1,458 | Sandstone, quarried | 1314 | 2,214 |
| Coal, bituminous, moderately wet | 801 | 1,350 | Shale, broken crushed | 1362 | 2,295 |
| Earth, common loam, dry | 1218 | 2,052 | Slag, furnace granulated | 1955 | 3,294 |
| Earth, mud, packed | 1843 | 3,105 | Stone or gravel, 37.5 to 87.5-mm (1.5 to 3.5 in.) size | 1442 | 2,430 |
| Granite, broken | 1538 | 2,592 | Stone or gravel, 18.75-mm (0.75 in.) size | 1602 | 2,700 |
| Gypsum | 2275 | 3,834 | | | |

**Bucket Fill Factors**

115% 110% 105% 100% 95%

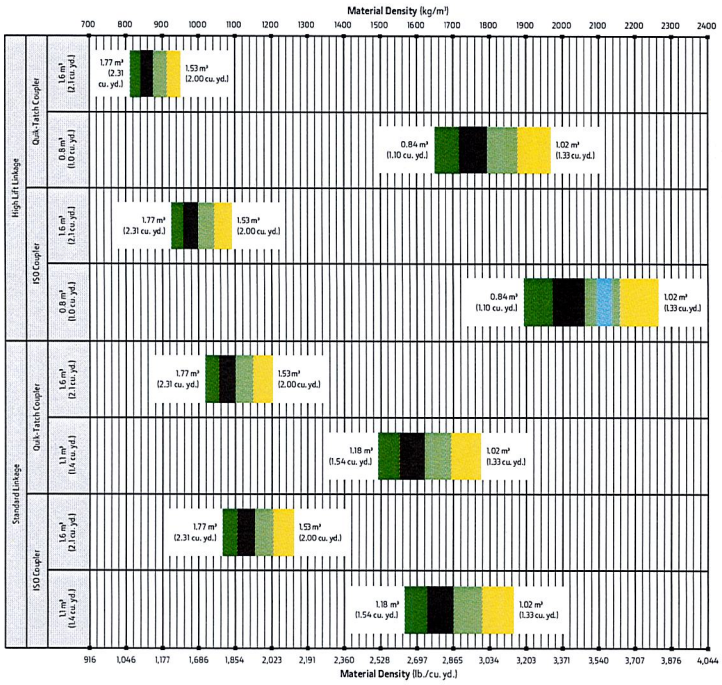

# Additional equipment

**Key:** ● Standard ▲ Optional or special
See your John Deere dealer for further information.

| 324 P | Engine |
|---|---|
| ● | Antifreeze, –37 deg. C (–34 deg. F) |
| ● | Coolant recovery tank |
| ● | Fan safety guard |
| ● | Fan, suction type, hydraulically driven, proportional speed |
| ● | Environmentally friendly engine oil drain |
| ● | Spin-on engine oil and fuel filter |
| ● | Engine oil cooler |
| ● | Quick-release fuel filter and water separator |
| ● | Under-hood dual-element air cleaner with restriction indicator with dust-evacuator valve |
| ● | Prescreened air intake |
| ● | Automatic glow plugs for cold start |
| ▲ | Engine coolant heater, 110 volts |
| | **Electrical** |
| ● | Starter switch with electric fuel cutoff |
| ● | 12-volt system |
| ● | Electrical load center with blade-type fuses behind operator's seat |
| ● | Standard 925-CCA battery |
| ● | Master electrical disconnect switch |
| ● | Alternator, 12 volts, 80 amps |
| ● | Horn (conforms to SAE J994 / J1446) |
| ● | Lights (conform to SAE 99): Driving / Front working (2) / Turn signals / Flashers / Stop / Taillights |
| ● | Worklights, rear (2) |
| ● | Reverse warning alarm (conforms to SAE J994 / J1446) |
| ● | Multifunction monitor with audible and visual warnings: Low engine oil pressure, engine coolant temperature, hydraulic oil temperature warning light, and parking brake indicator / Gauge and indicator: Engine coolant temperature gauge, fuel level gauge, speedometer, clock, and hour meter |
| ● | Indicator lights: Engine air filter / Parking brake actuated / Forward/reverse travel / 1st- or 2nd-speed range / Turn signal and hazard lights / High-beam driving lights indicator / Battery voltage |
| ● | Pre-wired for roof beacon |
| | **Powertrain/Brakes** |
| ● | Smooth AutoShift technology up to 38 km/h (23 mph) |

| 324 P | Powertrain/Brakes *(continued)* |
|---|---|
| ● | Hydrostatic (HST) transmission: Electric shift control / Single-lever joystick F-N-R / HST oil cooler / Inching pedal / 2 speeds forward and reverse / Infinitely variable speed control |
| ● | Rimpull control |
| ● | Service brakes, hydraulically actuated, self-adjusting internal wet-disc brake and driveline drum brake |
| ● | Parking brake, spring applied, hydraulically released, switch operated |
| ● | Conventional-type rear differentials, 100% locking front differential |
| | **Hydraulic System** |
| ● | Hydraulic fan for demand-based cooling |
| ● | Hydraulic system oil cooler |
| ● | Automatic bucket return-to-dig control |
| ● | Boom float detent |
| ● | Reservoir sight gauge for hydraulic/ HST oil |
| ● | Fine-micron hydraulic filters, vertical mounting |
| ● | Hydraulic function lockout |
| ● | 3-function hydraulic valve with pilot joystick control including auxiliary electrohydraulic (EH) proportional control for 3rd function |
| ▲ | 132-L/m (35 gpm) high-flow option |
| ● | Quick-coupler diagnostic ports: Priority pressure / Hydraulic pump pressure / Control valve pressure / HST pressure |
| | **Operator's Station** |
| ● | Cab (conforms to SAE J1040, SAE J231, ISO 3471, and ISO 3449): ROPS/FOPS / Heater/defroster / Rubber-plane isolation mounted for noise/vibration reduction / Intermittent front and rear windshield wipers and washers / Tinted safety glass / Adjustable sun visor / Mid-back cloth seat with mechanical suspension / 51-mm (2 in.) retractable seat belt / Full swing-out left and right doors with sliding window in left door |
| ▲ | Premium air-ride high-back heated seat with headrest and dual lumbar control |
| ● | Radio-ready cab, fused 12-volt radio electrical lead and speakers, and power port |
| ▲ | AM/FM/Weather-Band (WB) radio |

| 324 P | Operator's Station *(continued)* |
|---|---|
| ● | Air conditioning |
| ● | Storage compartment for operator's manual and other items located under operator seat and 2 options left of operator seat |
| ● | Rubber floor mat |
| ● | Dual tilt and telescoping steering column |
| ● | Rearview mirrors, outside (2) and inside (1) (conform to SAE J985) |
| ● | Handholds and steps, ergonomically located and slip resistant (conform to SAE J185) |
| ▲ | 76-mm (3 in.) retractable seat belt |
| | **Loader Linkage** |
| ● | Z-Bar loader linkage provides high bucket breakout |
| ▲ | High-Lift linkage |
| ● | Loader boom service locking bar (conforms to SAE J38) |
| | **Buckets and Attachments** |
| ▲ | Full line of buckets with bolt-on cutting edges |
| ▲ | ISO-style quick-coupler |
| ▲ | Quik-Tatch™ coupler |
| ▲ | Full line of construction utility forks, pallet forks, and other John Deere attachments* |
| | **Tires** |
| ● | 405/70R20 Mitas EM-01 |
| ▲ | 405/70R18 Firestone Duraforce |
| ▲ | 400/70R20 Michelin XMCL |
| ▲ | 400/70R20 Michelin Bibload |
| ▲ | 400/70R20 Nokian Hakkapeliitta |
| | **Other** |
| ▲ | LED worklights (spot or flood) |
| ▲ | Hydraulic reversing fan |
| ▲ | Front window guard |
| ● | Fenders, front and rear |
| ● | Articulation locking bar (conforms to SAE J276) |
| ● | Vandal protection, includes lockable engine enclosure and fuel fill |
| ● | Cast rear counterweight |
| ● | Drawbar, with locking pin |
| ● | Lift eyes |
| ● | Tie-downs |
| ▲ | Fire extinguisher |
| ● | Ride control |
| ▲ | Creep control/throttle lock |

**See your John Deere dealer for further information.*

**While general information, pictures, and descriptions are provided, some illustrations and text may include product options and accessories NOT AVAILABLE in all regions, and in some countries products and accessories may require modifications or additions to ensure compliance with the local regulations of those countries.**

Net engine power is with standard equipment including air cleaner, exhaust system, alternator, and cooling fan, at standard conditions per SAE J1349 and DIN 70 020, using No. 2-D fuel at 35 API gravity. No derating is required up to 1500-m (5,000 ft.) altitude. Gross power is without cooling fan. Specifications and design subject to change without notice. Wherever applicable, specifications are in accordance with SAE standards. Except where otherwise noted, these specifications are based on a unit with all standard equipment, ROPS cab, 405/70R120 Mitas EM-01 tires, full fuel tank, air conditioning off, and 79-kg (175 lb.) operator.

MW324PAU (23-05)

JOHN DEERE

**United Rentals**

# RENTAL QUOTE

BRANCH M17
1600 OLLIE LN
MARBLE FALLS TX 78654-3898
830-693-0000

## # 240644574

| | |
|---|---|
| **Customer #** | : 1213073 |
| **Quote Date** | : 10/28/24 |
| **Estimated Out** | : 11/12/24 09:00 AM |
| **Estimated In** | : 11/19/24 09:00 AM |
| **UR Job Loc** | : 101 E. PECAN, JOHNSO |
| **UR Job #** | : 2 |
| **Customer Job ID:** | |
| **P.O. #** | : CHRISTMAS LIGHTS 202 |
| **Ordered By** | : CHRIS LIESMANN |
| **Written By** | : FREDERICK PHILLIPS |
| **Salesperson** | : FREDERICK PHILLIPS |

**Job Site**

BLANCO COUNTY COURTHOUSE
101 E. PECAN
JOHNSON CITY TX 78636

**Office:** 830-868-4566

BLANCO COUNTY
PO BOX 471
JOHNSON CITY TX 78636

**This is not an invoice**
**Please do not pay from this document**

RENTAL ITEMS:

| Qty | Equipment | Description | Minimum | Day | Week | 4 Week | Estimated Amt. |
|---|---|---|---|---|---|---|---|
| 1 | 3104003 | BOOM 45-50' TELESCOPIC 4WD | | 543.00 | 1,204.00 | 3,340.00 | 1,204.00 |

YOU HAVE RENTED A MOBILE ELEVATING WORK PLATFORM (MEWP). SOME OF OUR MEWPS HAVE BEEN EQUIPPED WITH ACCESSORIES THAT MAY REDUCE THE RISK OF ENTRAPMENT HAZARDS AND CRUSHING INJURIES. OTHERS CAN HAVE THESE ACCESSORIES ADDED. FEEL FREE TO DISCUSS THESE ACCESSORIES WITH YOUR LOCAL BRANCH AND EXPLORE WHETHER YOU WOULD LIKE TO RENT A UNIT EQUIPPED WITH THIS TECHNOLOGY FOR YOUR PARTICULAR PROJECT.
FOR FURTHER INFORMATION ON MEWP SAFETY, PLEASE WATCH THE FOLLOWING VIDEO: HTTP://UNITEDRENTALS.COM/MEWPS-SAFETY

Rental Subtotal: 1,204.00

SALES/MISCELLANEOUS ITEMS:

| Qty | Item | | Price | Unit of Measure | Extended Amt. |
|---|---|---|---|---|---|
| 1 | TX UNIT PROPERTY TAX | [DRSURTX/MCI] | 1.793 | EACH | 1.79 |
| 1 | ENVIRONMENTAL SERVICE CHARGE | [ENV/MCI] | 24.080 | EACH | 24.08 |
| 1 | DELIVERY CHARGE | | 255.900 | EACH | 255.90 |
| 1 | PICKUP CHARGE | | 255.900 | EACH | 255.90 |

Sales/Misc Subtotal: 537.67

Agreement Subtotal: 1,741.67
Rental Protection: 180.60
Tax: 158.44
Estimated Total: 2,080.71

COMMENTS/NOTES:

CONTACT: CHRIS LIESMANN
CELL#: 512-689-7109

TO SCHEDULE EQUIPMENT FOR PICKUP, CALL 800-UR-RENTS (800-877-3687)
WE ARE AVAILABLE 24/7 TO SUPPLY YOU WITH A CONFIRMATION #
IN ORDER TO CLOSE THIS CONTRACT

**This proposal may be withdrawn if not accepted within 30 days. The above referenced Rental Protection Plan, environmental, and tax charges are estimates and are subject to change.**

**NOTICE: This is not a rental agreement. The rental of equipment and any items listed above is subject to availability and subject to the terms and conditions of the Rental and Service Agreement, which are available at https://www.unitedrentals.com/legal/rental-service-terms-US and which are incorporated herein by reference. A COPY OF THE RENTAL AND SERVICE AGREEMENT TERMS ARE AVAILABLE IN PAPER FORM UPON REQUEST.**

U1INVPDF

# 335 P

## Compact Track Loader

JOHN DEERE

# GET ON TRACK IN A BIG NEW WAY

Owners and operators like you — the ones who run them — have told us what makes our compact track loaders (CTLs) work on all kinds of jobsites. Driven by your input, we've created our brand-new 335 P-Tier to raise the industry bar. We packed horsepower under the hood, redefined cab comfort, and maximized performance and stability. Then we equipped this large-frame model with pressure-compensated, load-sensing (PCLS) hydraulics for advanced multifunctioning. And added optional integrated machine technology, high-flow auxiliary hydraulics to optimize attachments, and your choice of control styles and grade-management solutions. All to enhance the operator experience and help put you on track for powerful productivity.

**Designed to deliver**
Impressive 118 gross horsepower packed into a proven compact frame helps the 335 P-Tier CTL effortlessly push through the most demanding tasks. Plus it can capably maneuver around a wide range of jobsites and also transports easily.

**All about the operator**
Next-generation cab filled with ergonomic creature comforts like a premium heated/ventilated seat, low-effort joystick controllers with adjustable performance modes, 25-button sealed-switch module to streamline settings, and deluxe LCD monitor puts operators of all skill levels at ease. Larger glass area increases visibility for the operator. Sealed and pressurized to minimize dust and noise, the cab is also isolated from the frame for a smooth ride.

**Handle the pressure**
PCLS hydraulic system provides improved multifunctioning, smoother machine control, and better fuel economy than open-center hydraulic systems. Outstanding auxiliary hydraulic flow of 44 gallons per minute empowers the addition of high- or super-flow attachments.

**Flex your attachment muscle**
Equip your 335 P-Tier with your choice of over 100 available John Deere attachments to boost the versatility of your fleet. Expanded mulching head and cold planer models can help open up new work opportunities.

**Take control your way**
Electrohydraulic (EH) ISO-pattern joystick controls that allow customized machine operations based on operator preference come standard. EH four-way controls, including EH foot control, ISO joystick control, H-pattern joystick control, and ISO and foot controls, are optional.

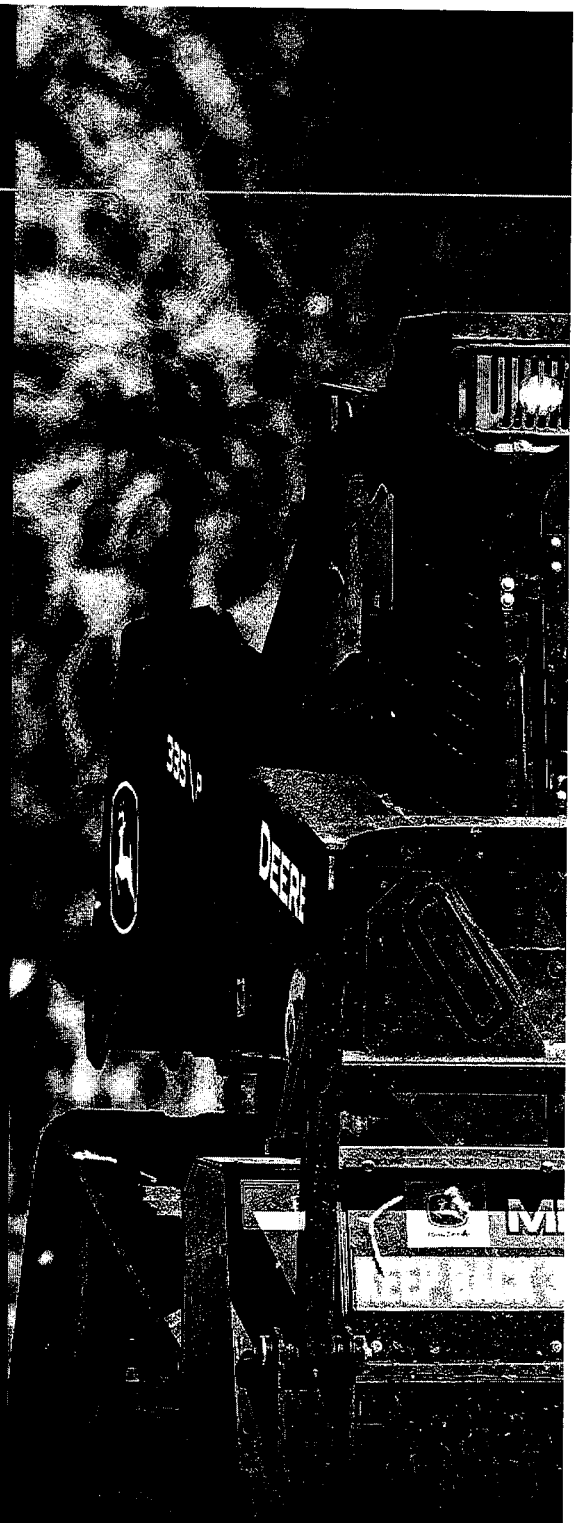

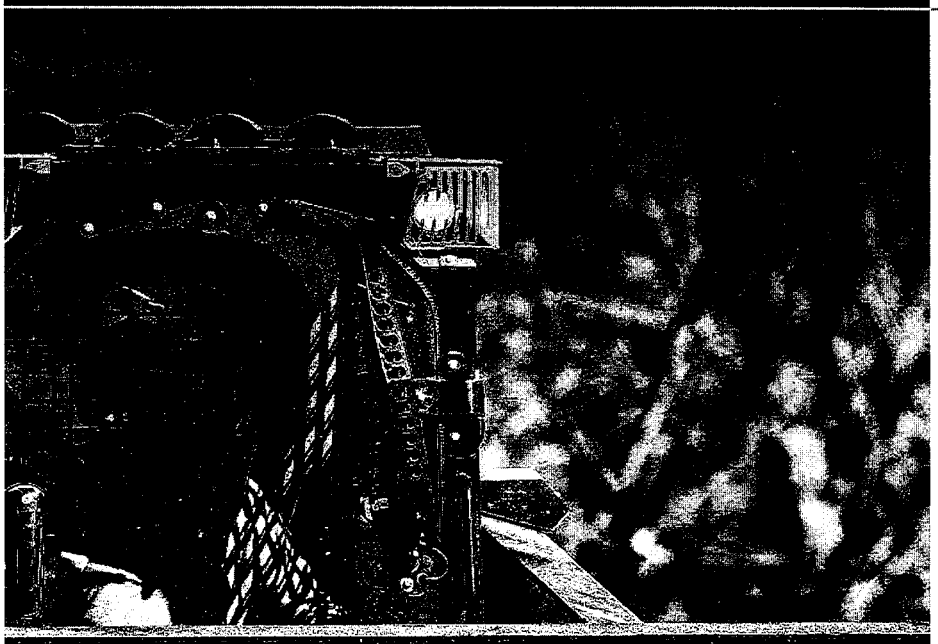

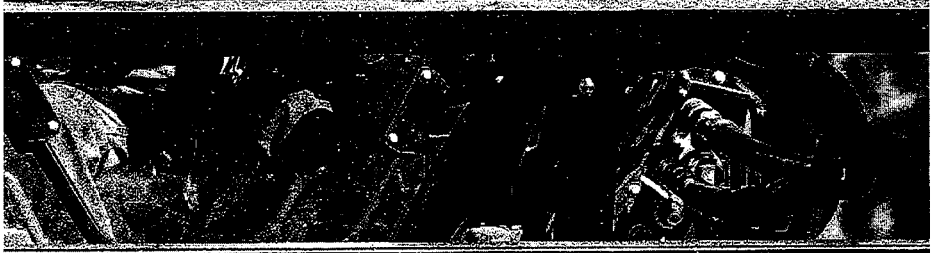

# GRADE IT EASY

## WITH JOHN DEERE GRADE-CONTROL OPTIONS

- **Onboard Grade Indicate** provides a real-time readout of cross-slope (machine roll) and mainfall slope (machine pitch) on the in-cab monitor. Use relative value readout to alter grades relative to existing or reference grades.
- **Slope Control** lets operators automatically maintain blade position without using external lasers or GNSS, to hold grade with minimum effort, corrections, and adjustments. Laser option helps make Slope Control even more productive.
- **Slope Control With Dual Laser** enables operators to automatically control the blade to a specific slope and elevation using a rotating laser.
- Built on the legacy of the John Deere 333G SmartGrade™ — the first CTL in the industry to feature fully integrated 3D-grade-control technology — the **new 335 P-Tier SmartGrade** includes our operator-friendly DozerMode control system. Pushing a button on the sealed-switch module switches to the DozerMode control pattern to enable intuitive crawler operation. Deere-designed and -built six-way SG96 Dozer Blade is tough enough to cut grade but can also smoothly spread or precisely fine-grade materials.

## PCLS HYDRAULIC SYSTEM IMPROVES FUEL ECONOMY & MULTIFUNCTIONING

COMPARED TO OPEN-CENTER HYDRAULIC SYSTEMS

**Smooth operator**
Optional anti-vibration undercarriage system* allows higher travel speeds over rough terrain with excellent material retention. Bogie system enables smoother transitions over uneven surfaces.

*Only for zigzag-bar tracks; not compatible with SmartGrade or SmartGrade with Slope Control.

**Repeat performance**
Shorten cycle times and speed production in repetitive boom applications with the optional EH boom performance package that automates functions.

**Load warrior**
Height to hinge pin of 11 feet enables the 335 P-Tier to easily load tandem-axle dump trucks, fill hoppers, and feed mixers. Additional reach comes in handy for moving pallets of pavers or other weighty cargo.

**In a whole new light**
Opt for a new 8-inch touchscreen display to clearly access and monitor vital machine data. Standard LED deluxe lighting and rearview camera plus optional Surround View further enhance jobsite visibility.

**Run long**
Large tank capacity for both fuel and diesel exhaust fluid (DEF) lets you run all day without having to refill. Tilt the hood up for simple ground-level access to the dipstick, filters, and fuel and fluid fills. Convenient cab-footwell access helps speed cleaning.

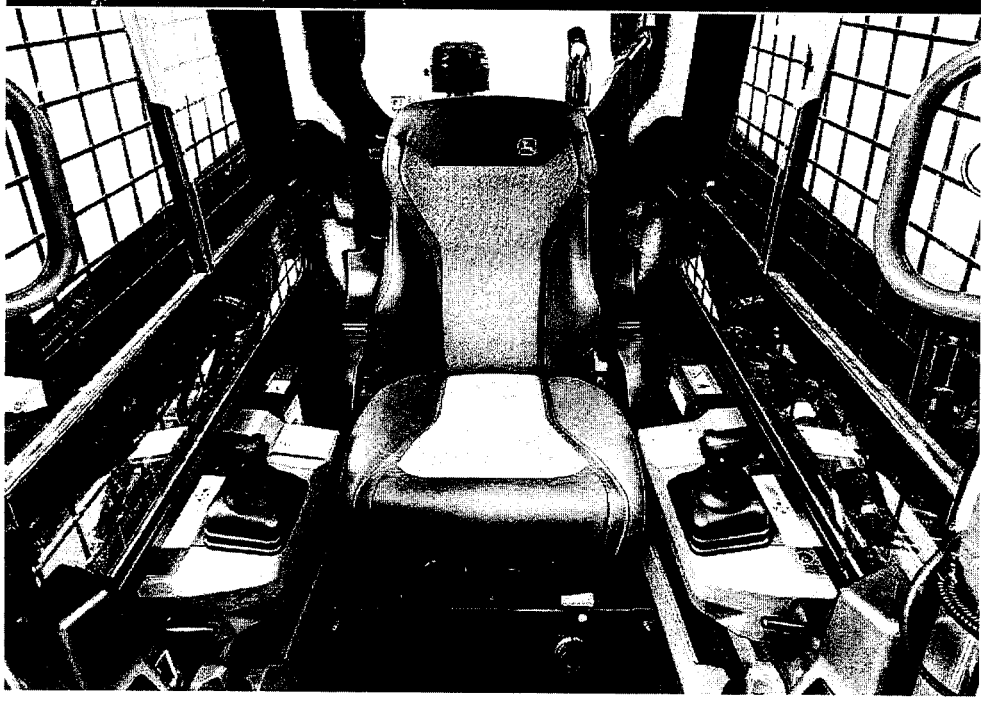

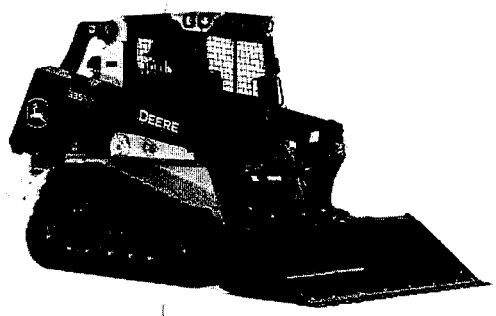


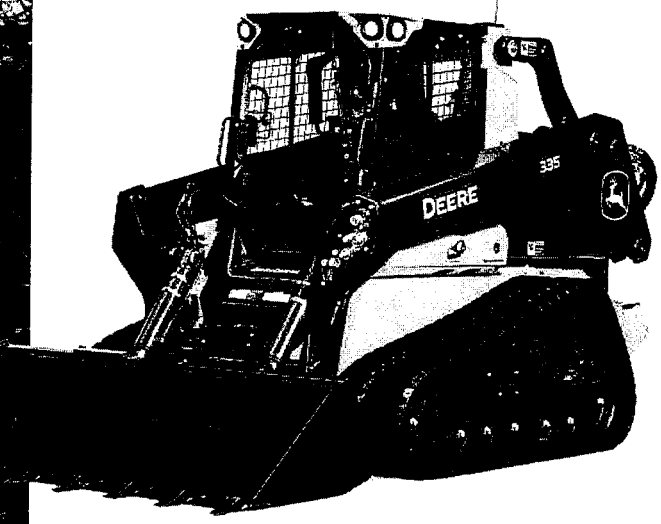

## LARGE FUEL & DEF TANKS EXTEND RUN TIMES BETWEEN REFILLS

**Safety features**
Standard personal-protection features include in-cab-activated boom lock and triple-interlock system that detects the presence of the operator.

**Connected machines**
John Deere construction equipment comes with in-base connectivity — free from subscriptions or annual renewals. Analyze critical machine data, track utilization, review diagnostic alerts, and more from **the John Deere Operations Center™.** The Operations Center also enables **John Deere Connected Support™,** which uses data from thousands of connected machines to proactively address issues before they arise. With your approval, your dealer can also remotely monitor machine health, diagnose problems, and even update machine software without a trip to the jobsite.*

*Availability varies by region and product. Options not available in every country.

# 335 P

## 335 P-TIER COMPACT TRACK LOADER SPECIFICATIONS

While general information, pictures, and descriptions are provided, some illustrations and text may include product options and accessories NOT AVAILABLE in all regions, and in some countries products and accessories may require modifications or additions to ensure compliance with the local regulations of those countries.

| **Engine** | **335 P-TIER / 335 P-TIER SMARTGRADE™** | | |
|---|---|---|---|
| Manufacturer and Model | Yanmar 4TNV94FHT | Displacement | 3.1 L (186.3 cu. in.) |
| Non-Road Emission Standard | EPA Final Tier 4/EU Stage IV | Rated Engine Speed | 2,500 rpm |
| Cylinders | 4 | Torque Rise | 39% at 1,700 rpm |
| Gross Rated Power (ISO 14396) | 88.0 kW (118.0 hp) at 2,500 rpm | Aspiration | Turbocharged, intercooled |
| Net Peak Power (SAE J1349 / ISO 9249) | 85.5 kW (114.7 hp) at 2,500 rpm | Air Cleaner | Dry dual element |
| Peak Torque | 395 Nm (291.3 ft.-lb.) at 1,700 rpm | | |
| **Cooling** | | | |
| Fan Type | Variable-speed hydraulic drive and reversing fan drive standard | | |
| **Powertrain** | | | |
| Pump | Axial-piston hydrostatic | Travel Speeds *(continued)* | |
| Controls | Electrohydraulic | 2 Speed, High | 13.7 km/h (8.5 mph) |
| Travel Speeds | | **Brake** | Integral, automatic, spring-applied, hydraulically released wet-disc brake |
| 2 Speed, Low | 8.9 km/h (5.5 mph) | | |
| **Undercarriage** | | | |
| **Rubber Tracks** | New-Generation smooth-ride long-life rubber with steel inserts | Ground Pressure *(continued)* | |
| | | With Optional 400-mm (15.8 in.) Track | 36.4 kPa (5.3 psi) |
| Track Width | | Track Rollers (per side) | 5 triple-flange smooth-ride all-steel rollers |
| Standard | 450 mm (17.7 in.) | | |
| Optional | 400 mm (15.8 in.) | Track Idlers (per side) | 2 double-flange smooth-ride all-steel rollers |
| Ground Pressure | | | |
| With Standard 450-mm (17.7 in.) Track | 32.8 kPa (4.8 psi) | Tractive Effort | 5221 kgf (11,500 lbf) |
| **Hydraulics** | | | |
| Pump Flow | | High Pressure | 27 579 kPa (4,000 psi) |
| Standard | 94.6 L/m (25 gpm) | Hydraulic Horsepower Flow (calculated) | |
| Total With High-Flow Option | 166.6 L/m (44 gpm) | Standard | 38.1 kW (51.1 hp) |
| System Pressure at Couplers | 24 132 kPa (3,500 psi) | High Flow / High Pressure | 76.6 kW (102.7 hp) |
| **Cylinders** | | | |
| Type | John Deere heat-treated, chrome-plated, polished cylinder rods, hardened steel (replaceable bushings) pivot pins | | |
| **Electrical** | | | |
| Voltage | 12 volt | **Lights** | Halogen, 2 front and 1 rear |
| Battery Capacity | 950 CCA | **Deluxe Lights (optional)** | LED, 4 front and 1 rear |
| Alternator Rating | 120 amp | **Serviceability** | |
| **Operator's Station** | | **Refill Capacity** | |
| ROPS (ISO 3471) / FOPS (ISO 3449) structure with quick-pivot standard | | Fuel Tank | 136.3 L (36 gal.) |
| **Operating Weights** | | | |
| With Standard 450-mm (17.7 in.) Track | 5584 kg (12,300 lb.) / 6148 kg (13,542 lb.) with SG96 Dozer Blade | | |

| **Machine Dimensions** | | |
|---|---|---|
| **A** Length Without Bucket | 3.17 m (125 in.) (10 ft. 5 in.) | |
| **B** Length With Foundry Bucket | 3.84 m (151.2 in.) (12 ft. 7 in.) | |
| **C** Width Without Bucket | | |
| With 400-mm (15.8 in.) Track | 2.00 m (78.9 in.) (6 ft. 7 in.) | |
| With 450-mm (17.7 in.) Track | 2.05 m (80.7 in.) (6 ft. 9 in.) | |
| **D** Height to Top of ROPS | 2.22 m (87.4 in.) (7 ft. 3 in.) | |
| **E** Height to Hinge Pin | 3.35 m (132 in.) (11 ft. 0 in.) | |
| **F** Dump Height With Foundry Bucket | 2.69 m (106.1 in.) (8 ft. 10 in.) | |
| **G** Dump Reach | | |
| With Foundry Bucket | 0.74 m (29 in.) | |
| With Construction Bucket (no edge) | 0.92 m (36.2 in.) (3 ft. 0 in.) | |
| **H** Ground Clearance | 0.25 m (9.8 in.) | |
| **I** Angle of Departure | 24.7 deg. | |
| **J** Front Turn Radius With Foundry Bucket | 2.18 m (86 in.) (7 ft. 2 in.) | |
| **K** Dump Angle (full lift height) | 48 deg. | |
| **L** Bucket Rollback (ground level) | 35 deg. | |
| **Loader Performance** | | |
| Tipping Load With Foundry Bucket | 5221 kg (11,500 lb.) | |
| SAE Rated Operating Capacity With 1 Counterweight and Foundry Bucket | | |
| At 35% Tipping Load | 1827 kg (4,025 lb.) | |
| At 50% Tipping Load | 2611 kg (5,750 lb.) | |
| Breakout Force | *With Foundry Bucket* | *With Construction Bucket* |
| Boom | 3859 kg (8,500 lb.) | 3541 kg (7,800 lb.) |
| Bucket | 6265 kg (13,800 lb.) | 4313 kg (9,500 lb.) |

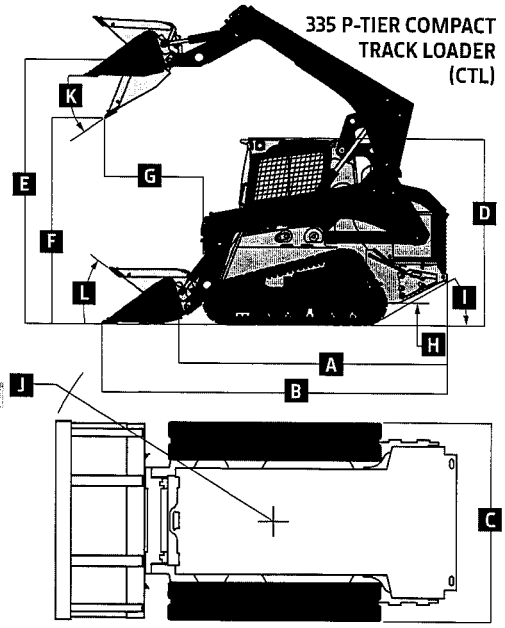

# 335 P-TIER COMPACT TRACK LOADER SPECIFICATIONS

335 P

While general information, pictures, and descriptions are provided, some illustrations and text may include product options and accessories NOT AVAILABLE in all regions, and in some countries products and accessories may require modifications or additions to ensure compliance with the local regulations of those countries.

## 335 P-TIER SMARTGRADE DIMENSIONS

| | | |
|---|---|---|
| | **Blade Type** | *Power-Angle-Tilt (PAT)* |
| M | Blade Width | 2440 mm (96 in.) (8 ft. 0 in.) |
| N | Blade Height | 740 mm (29 in.) |
| | SAE Capacity | 1.18 m³ (1.54 cu. yd.) |
| | Weight | 640 kg (1,400 lb.) |
| O | Blade Angle | ±24 deg. |
| P | Overall Width With Blade Angled | 2258 mm (88 in.) (7 ft. 4 in.) |
| Q | Blade Tilt | ±8 deg. |
| R | Cut Reach | |
| | With 400-mm (15.8 in.) Narrow Track | 15.3 mm (0.6 in.) |
| | With 450-mm (17.7 in.) Wide Track | –22.2 mm (–0.8 in.) |
| S | Width Over Track | |
| | With 400-mm (15.8 in.) Narrow Track | 2000 mm (78.9 in.) (6 ft. 6.9 in.) |
| | With 450-mm (17.7 in.) Wide Track | 2047 mm (80.7 in.) (6 ft. 8.7 in.) |
| T | Cast Reach | |
| | With 400-mm (15.8 in.) Narrow Track | 246.0 mm (9.7 in.) |
| | With 450-mm (17.7 in.) Wide Track | 223.8 mm (8.8 in.) |

**335 P-TIER SMARTGRADE CTL**

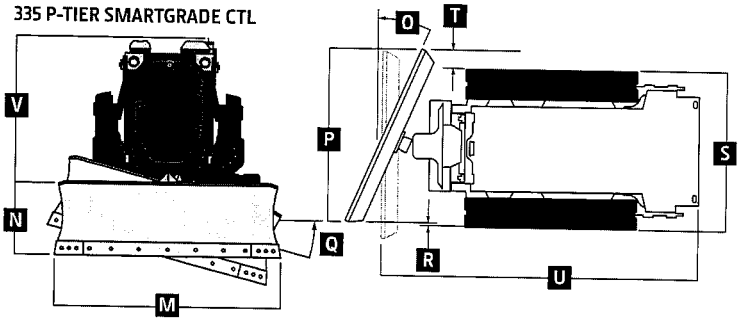


| | | |
|---|---|---|
| U | Length With Dozer Blade Installed | |
| | With 400-mm (15.8 in.) Narrow Track | 3940 mm (155 in.) (12 ft. 11 in.) |
| | With 450-mm (17.7 in.) Wide Track | 3940 mm (155 in.) (12 ft. 11 in.) |
| V | Height With GNSS Antenna | 2360 mm (92.9 in.) (7 ft. 9 in.) |

# Additional equipment

**Key:** ● Standard ▲ Optional or special

See your John Deere dealer for further information.

### 335 P Engine

- ● Meets EPA Final Tier 4/EU Stage IV emissions
- ● Yanmar 4TNV94FHT
- ● Auto-idle
- ● Automatic fan tensioner
- ● Automatic preheat
- ● Electronic injection system
- ● Engine air precleaner kit
- ● Fuel tank, 136.3 L (36 gal.)
- ● John Deere COOL-GARD™ II Extended-Life Engine Coolant
- ● John Deere Plus-50™ 10w30 initial engine oil fill[§]
- ● 4-cylinder, 88.0 kW (118 gross hp)/114.7 kW (85.5 net hp), 3.1-L (186.3 cu. in.) displacement
- ● 5-micron primary fuel filter and water separator
- ▲ Cold-weather starting package

### Cooling System

- ● Coolant surge tank
- ● Variable-speed hydraulically driven fan cooling system
- ● Reversing fan drive

### Powertrain

- ● High-torque heavy-duty planetary-reduction final drive
- ● Automatic spring-applied hydraulically released wet-disc park brake
- ● Wet-disc brakes
- ● Transmission, 2 speed

### Hydraulic System

- ● John Deere hydraulic cylinders with cushioned boom cylinders
- ● John Deere heat-treated, chrome-plated cylinder rods with replaceable bushings
- ● Connect-under-pressure auxiliary couplers
- ● Quick-check hydraulic fluid-level sight glass
- ● 1,000-hour, 5-micron hydraulic filter
- ● High-flow hydraulics
- ● Axial-piston hydrostatic pump

### Electrical

- ● Automatic engine/hydraulic shutdown protection system
- ● Auxiliary hydraulics operator-presence system
- ● Courtesy lighting

### 335 P Electrical *(continued)*

- ● Deluxe instrumentation monitor with: Operator-selectable monitoring – Hour meter, engine rpm, battery voltage, diagnostics, monitor configuration, engine coolant temperature, hydraulic oil temperature / LED warning indicators – Glow plug, seat switch, seat belt, door open, auxiliary hydraulics, park brake engaged, 2-speed engaged, stop, low engine oil pressure, engine coolant over-temperature, battery not charging, air filter restriction, and hydraulic filter restriction
- ● Deluxe LED lighting package with additional cab-integrated side lights (2)
- ● Triple-interlock operator-presence control system
- ● Backup alarm
- ● Battery, 950 CCA
- ● Horn
- ▲ Hazard warning lights
- ▲ Strobe light, amber

### Operator's Station

- ● Deluxe cab headliner
- ● ISO controls with programmable detents and electrohydraulic (EH) boom performance package;[†] also includes EH joystick performance package*
- ▲ Onboard grade indication: Grade-control option delivers onboard readout within LCD monitor that provides slope of blade (cross-slope direction) and mainfall (fore/aft direction) within ±0.5-percent accuracy
- ● Keyless-start sealed-switch module with integrated anti-theft system and operator memory preference settings
- ● Electronic push-button auxiliary controls
- ● Pull-down adjustable lap bar
- ● Quick-pivot ROPS
- ● Rear window
- ● Top window
- ● Sliding/locking/glass side windows
- ● ROPS/FOPS operator structure
- ● Glass cab enclosure
- ● Seat belt, 51 mm (2 in.), retractable
- ▲ Shoulder belt, 51 mm (2 in.) or 76 mm (3 in.)
- ▲ Severe-duty cab door and wiper system

### 335 P Operator's Station *(continued)*

- ● Premium high-back cut-and-sewn air-ride seat, heated and ventilated
- ● 12-volt power port / Dome light / Cargo storage / Beverage holder
- ● Air conditioning with heater/defroster
- ● AM/FM radio with auxiliary input and Bluetooth® for audio streaming and hands-free calling
- ● Floor mat with left footrest
- ● Rearview mirror
- ● Rearview camera
- ▲ Surround View

### Loader

- ● In-cab boom lockout to secure loader before exiting seat
- ● Patented John Deere Power Quik-Tatch™ (no grease required)
- ● Patented John Deere vertical-lift boom
- ● Hydraulic self-leveling on/off and ride control

### Other

- ● Convenient front and rear tie-downs
- ● Environmental drains for all fluid reservoirs
- ● Chrome exhaust stack
- ▲ Engine oil/hydraulic fluid-sampling kit
- ▲ Forestry protection packages
- ● Heavy-duty rear grille
- ● Rear counterweights, 1 set, 78 kg (172 lb.)
- ▲ Additional rear counterweights (1 or 2 sets in addition to the single set included as standard equipment), 78 kg (172 lb.) (each set)
- ▲ 3-point lift kit
- ▲ SMV sign kit
- ● Track, 450-mm (17.7 in.) wide
- ▲ Track, 400-mm (15.8 in.) wide
- ● JDLink™ wireless communication system (available in specific countries; see your dealer for details)

*[§]500-hour engine oil-change intervals when John Deere Plus-50 oil and John Deere oil filter are used.*

***EH joystick performance package** features switchable accelerator/decelerator, selectable propel speeds, creep control, boom- and bucket-speed settings, and 12-volt 3- and 14-pin attachment-control harness.*

*[†]**EH boom performance package** features include EH bucket self-level up and down, return to dig, return to carry, and boom-height kick-out.*

**While general information, pictures, and descriptions are provided, some illustrations and text may include product options and accessories NOT AVAILABLE in all regions, and in some countries products and accessories may require modifications or additions to ensure compliance with the local regulations of those countries.**

Net engine power is with standard equipment including air cleaner, exhaust system, alternator, and cooling fan, at standard conditions per SAE J1349 and DIN 6270B, using No. 2-D fuel at 35 API gravity. Gross power is without cooling fan. Specifications and design subject to change without notice. Wherever applicable, specifications are in accordance with SAE standards. Except where otherwise noted, these specifications are based on a unit with standard equipment, full fuel tank, and 79-kg (175-lb.) operator.

MK335CAU (24-05)

JOHN DEERE

# Retail Purchase Order

RDO Equipment Co.
17301 IH-35 Ste 200
Buda TX, 78610
Phone: (737) 770-5100 - Fax:

**Bill To:**
BLANCO COUNTY - A/P
PO BOX 471
JOHNSON CITY, TX, 786360471
(830) 833-1077

| | |
|---|---|
| **Purchase Order Date:** | 10/17/2024 |
| **Purchase Order #:** | 1818789 |
| **Purchaser Account #:** | 8880782 |
| **Customer Purchaser Type:** | Governmental - County |
| **Customer Market Use:** | Other - Recycling |
| **Location of First Working Use:** | JOHNSON CITY, TX, 786360471 |
| **Sales Professional:** | Peter Arcos |
| **Phone:** | (830) 632-3145 |
| **Fax:** | |
| **Email:** | parcos@rdoequipment.com |

## Equipment Information

| Quantity | Serial Number<br>Stock Number | Hours<br>(approx.) | Status / Year / Make / Model<br>Additional Items | Cash Price |
|---|---|---|---|---|
| 1 | 1T0335PAVRFF05505<br>Z086434 | 0 | New 2025 JOHN DEERE 335P | $146,793.00 |
| | | | Freight Out Factory Freight | $2,195.00 |
| | | | Freight Out Delivery | $595.00 |
| | | | Prep / Reconditioning PDI | $1,350.00 |
| | | | Prep / Reconditioning Debree Kit Install | $2,450.00 |
| | | | Prep / Reconditioning Coupler Guard Install | $250.00 |
| | | | Customer Discount Sourcewell 30% | ($44,037.90) |
| | | | Warranty -John Deere Comprehensive-48 Months, 2000 Hours,Deductible: 0, Exp Date: 9/16/2028 | $5,490.00 |
| 1 | TBD<br>TBD | 0 | New 2024 JOHN DEERE RRAKE78 Grapple | $9,702.00 |
| | | | Customer Discount Sourcewell Discount 14% | ($1,323.28) |
| 1 | TBD<br>TBD | 0 | New 2024 JOHN DEERE BYT12852 | $630.00 |
| 1 | TBD<br>TBD | 0 | New 2024 JOHN DEERE BYT12300 | $3,885.00 |

**Equipment Subtotal: $127,978.82**

## Purchase Order Totals

| | |
|---|---|
| **Balance:** | $127,978.82 |
| **Total Taxable Amount:** | $0.00 |
| **TX STATE TAX:** | $0.00 |
| **TX COUNTY TAX:** | $0.00 |
| **TX SPECIAL TAX:** | $0.00 |
| **Sales Tax Total:** | $0.00 |
| **Sub Total:** | $127,978.82 |
| **Cash with Order:** | $0.00 |
| **Balance Due:** | **$127,978.82** |

## Legal Information

For the Construction Product(s)

**ACKNOWLEDGMENTS** - Purchaser offers to sell, transfer, and convey the item(s) listed as "Trade In" to the Dealer at or prior to the time of delivery of the above Product(s), as a "trade-in" to be applied against the cash price. Purchaser represents that each "trade-in" item shall be free and clear of all security interests, liens, and encumbrances at the time of transfer to the Dealer except to the extent shown below. The price to be allowed for each "trade-in" item is listed on this document. The Purchaser promises to pay the balance due shown hereon in cash, or to execute a Time Sale Agreement (Retail Installment Contract), or a Loan Agreement for the purchase price of the Product(s), plus additional charges shown thereon, or to execute a Lease Agreement, on or before delivery of the Product(s) ordered herein. Despite delivery of the Product(s) to the Purchaser, title shall remain with the Seller until one of the foregoing is accomplished. Except as provided herein and as necessary to protect RDO Equipment from the claims or a bankruptcy trustee or a buyer in the ordinary course or business, the Purchaser and the Dealer agree that this Purchase Order is not a security agreement and that delivery of the Product(s) to the Purchaser pursuant to this Purchase Order will not constitute possession of the Product(s) by the Purchaser, as a debtor, for the purposes of the purchase money security provisions in any statutes relating to personal property security or its equivalent. Purchaser understands that its rights in connection with this purchase are limited as set forth in this Purchase Order. I (we) hereby grant a security interest to RDO Equipment in the Product.

**DISCLOSURE OF REGULATION APPLICABILITY** - When operated in California, any off-road diesel vehicle may be subject to the California Air Resources Board In-Use Off-Road Diesel Vehicle Regulation. It therefore could be subject to retrofit or accelerated turnover requirements to reduce emissions of air pollutants. More information is available on the California Air Resources Board website at http://www.arb.ca.gov/msprog/ordiesel/ordiesel.htm.

**IMPORTANT WARRANTY NOTICE** - The Standard Warranty for new John Deere construction and forestry products is set forth in a separate document provided by the dealer.Please read the Standard Warranty carefully before signing. No express warranty is made unless specified in the Warranty Statement. PURCHASER'S RIGHTS AND REMEDIES PERTAINING TO THIS PURCHASE ARE LIMITED AS INDICATED IN THE STANDARD WARRANTY AND PURCHASE ORDER. WHERE PERMITTED BY LAW, NO IMPLIED WARRANTY OF MERCHANTABILITY OR FITNESS IS MADE.

Telematics: Orders of telematic devices include only the hardware. Where available, telematics software, including JDLink™ connectivity service, may be enabled from your local John Deere Operations Center or JDLink website. Please see your authorized John Deere dealer for assistance.

The undersigned purchaser(s) (the "Purchaser") hereby orders the product (the "Product") described above from the Dealer. The Dealer shall not be liable for failure to provide the Product or for any delay in delivery if such failure or delay is due to the Dealer's inability to obtain such Product from the manufacturer or supplier or other cause beyond the Dealer's control. The cash price shown above is subject to the Dealer receiving the Product from the manufacturer or supplier prior to any change in price by the manufacturer or supplier and is also subject to any new or increased taxes being imposed upon the sale of the Product after the date of this Purchase Order.

Upon signature of delivery acknowledgment, customer is accepting the equipment, including attachments, in "AS IS" condition, agreeing to notify RDO Equipment Co. within 24 hours of any damages or discrepancies found upon receipt of equipment.

## Signature Area

### Purchase Order Accepted By:

(Customer's Signature) (Date Accepted)

(Authorized Signature of Dealer) (Date Accepted)

### Delivery of Equipment Acknowledgement:

(Customer's Signature) Date Accepted

(Account Manager's Signature) Date Accepted

### Standard Warranty Acknowledgement:

(Delivered On) (Warranty Begins) (Customer's Intials) (Account Manager's Initials)

### Extended Warranty Oil Sampling Acknowledgement:

(Customer's Initials) (Account Manager's Initials)

## Equipment Options

| Qty | Serial Number | Year / Make / Model | Description |
|---|---|---|---|
| 1 | 1T0335PAVRFF05505 | 2025 JOHN DEERE 335P | 0202 USA DEST CODE |
| | | | 0259 ENGLISH OP MAN & DECALS |
| | | | 0351 TRANSLATED TEXT LABELS |
| | | | 0953 ADVANCED VISION SYSTEM |
| | | | 1100 NO OBSTACLE INTELLIGENCE |
| | | | 1362 2" SEAT BELT W/SHOULDERSTRAP |
| | | | 183N JDLINK IRON |
| | | | 1880 LESS RECEIVER |
| | | | 1900 LESS DISPLAY |
| | | | 1950 LESS DISPLAY APPLICATION |
| | | | 2000 OPEN CODE |
| | | | 2940 LESS GRADE CONTROL |
| | | | 5608 WIDE ZIG-ZAG MULTI BAR TRKS |
| | | | 8048 TRIPLE SET COUNTERWEIGHT |
| | | | 8059 SEVERE DUTY DOOR |
| | | | 8934 84" HD CONST BKT W/ EDGE |
| 1 | TBD | 2024 JOHN DEERE RRAKE78 Grapple | 03B0T RR78 ROOT RAKE |
| | | | AT436025 Boom Mounted Hose Guide Kit |
| 1 | TBD | 2024 JOHN DEERE BYT12852 | BYT12297 Guard, Auxiliary Hydraulic Quick Coupler |
| 1 | TBD | 2024 JOHN DEERE BYT12300 | BYT12300 BYT12300 Debree Mitigation Kit Installed |

# STANDARD WARRANTY FOR NEW JOHN DEERE CONSTRUCTION, COMPACT CONSTRUCTION (CCE) FORESTRY, AND UTILITY PRODUCTS – US & Canada

- **Construction & Forestry Products:** 12 months/unlimited hours (whichever occurs first) Full Machine Standard Warranty
- **Compact Construction Equipment (CCE) Products:** 24 months or 2000 hours (whichever occurs first) Full Machine Standard Warranty
- **C&E Series Pull-Type Scrapers:** 6 months Full Machine Standard Warranty
- **DC & DE Pull-Type Scrapers**: 12 months Full Machine Standard Warranty
- **Scraper Tractors:** 24 Months or 2000 Hours (whichever occurs first) Full Machine Standard Warranty
- **Forestry Attachments:** 12 Months or 2000 Hours (whichever occurs first) Full Machine Standard Warranty

The "Standard Warranty" is part of the warranty protection package available from John Deere Construction & Forestry Company (John Deere Limited in Canada) ("John Deere") to purchasers of new John Deere products ("product"):

**STANDARD Warranty** is John Deere's standard new product warranty, described in this document, provided at no additional charge to the purchaser.

**EXTENDED Warranty** is a separate repair contract made available by John Deere for purchasers who wish to complement their Standard Warranty coverage. Complete Extended Warranty details, including coverage options and limitations, are set forth in the Application for Extended Warranty, which is available from authorized John Deere dealers.

**STRUCTURALL Warranty** applies to certain structural components as listed below and as described in this document.

**FACTORY-INSTALLED UNDERCARRIAGE Warranty** applies to certain undercarriage components as listed below and as described in this document.

## A. STANDARD WARRANTY - GENERAL PROVISIONS

John Deere will repair or replace, at its option, any parts (except those specified below) of a new John Deere product that, as delivered to the original retail purchaser(s), are defective in material or workmanship. Performance of this warranty will be free of charge for parts and labor, except as otherwise stated below. Standard Warranty applies only to purchases from John Deere and authorized John Deere dealers and, except as otherwise provided in the next sentence and section L below, is extended only to the original retail purchaser of the product. Remaining Standard Warranty applicable to a used John Deere product is transferred to a subsequent purchaser of the product only if the subsequent purchaser requests a transfer from an authorized John Deere dealer before the product's Standard Warranty expires. Coverage begins on the date of delivery of the product to the original retail purchaser. For purposes of this warranty, a product that has been rented, used for demonstration purposes for 150 or more hours, or otherwise used prior to its original retail purchase has been "used" for the total duration of such use. Warranty statements required by law covering engine emissions-related parts and components are found on a separate written warranty certificate provided to the purchaser at the time of the original retail purchase.

## B. WHAT IS COVERED BY STANDARD WARRANTY -

All parts of a new John Deere product (except those noted in Sections D and E below) are covered during the Standard Warranty period set out above.

## C. EXCLUSIVE REMEDY -

The repair or replacement of covered parts or components that are defective, as provided in Sections A, B, D.2 and D.3 herein, shall be the purchaser's exclusive remedy for any defect in the product. However, if after repeated attempts such repair or replacement fails to correct the performance problem caused by the defect, the purchaser's sole remedy shall be a refund of the amount paid for the product (in exchange for a return of the product), excluding any transportation charges, license fees, taxes and insurance premiums, and less a reasonable allowance for use of the product prior to its return. In no event will the dealer, John Deere or any company affiliated with John Deere be liable for any incidental or consequential damages, including but not limited to loss of profits, rental of substitute equipment or other commercial loss. Correction of defects in the manner provided above shall constitute fulfillment of all liabilities of the Dealer, John Deere, or any company affiliated with John Deere to the purchaser or any other person, whether based upon contract, tort, strict liability, or otherwise. This limitation does not apply to claims for personal injury.

**D. ITEMS COVERED SEPARATELY -**

1. Standard Warranty does not apply to batteries, radios, tires, cameras, or to Cummins, MTU or Detroit Diesel Engines installed in John Deere products, which are covered by separate written warranties.
2. Factory-Installed Undercarriage Warranty covers all non-rubberized factory-installed undercarriage wear components for 3 years or 4,000 hours from the date of delivery to the original retail purchaser, whichever occurs first (unless terminated earlier under Section F, below). For purposes of this warranty, a product that has been rented, used for demonstration purposes for 150 or more hours, or otherwise used prior to its original retail purchase has been "used" for the total duration of such use. In addition to the items listed in section E below, Factory-Installed Undercarriage Warranty does not cover: failures due to wear, machine application, maintenance practices, or improper machine configuration; removal and installation labor; transportation or hauling costs; unapproved parts; non-wear items; and rubberized undercarriage components such as rubber tracks. Warranty claims will be pro-rated based upon wear of the failed component and whether track shoe width is approved by John Deere. Factory-Installed Undercarriage Warranty does not apply to Scraper Tractors.
3. StructurALL Warranty for new John Deere Products (except Compact Excavators & Loaders, Skid-Steer Loaders, Compact Track Loaders, Scraper Tractors, Pull-Type Scrapers, and Forestry Attachments, which are not eligible for StructurALL Warranty) begins at the date of delivery to the original retail purchaser and ends (unless terminated earlier under Section F, below) after three (3) years, or 10,000 hours (whichever occurs first). For purposes of this warranty, a product that has been rented, used for demonstration purposes for 150 or more hours, or otherwise used prior to its original retail purchase has been "used" for the total duration of such use. **StructurALL Warranty applies only to the following structural components listed below as installed on the product at the time of original manufacture.** If a particular component is not listed below it is not covered by StructurALL Warranty.

   Arm; Articulation Joint (incl. pins & bushings); Bin Frame; Boom; Carbody; C-Frame*; Circle Frame; Coupler (John Deere built ONLY); Dipperstick; Draft Frame; Engine Frame; Equipment Frame; Grapple Arch and Grapple Boom; Loader Arm; Loader Frame; Mainframe; Moldboard Lift Arm; NeverGrease™ Pin Joints [Includes steering pin and bushing joints (standard equipment), roller elements (roller bearings) in bucket to boom joints and sliding elements (bushing) for boom and linkage joints (optional equipment)]; Rollover Protection Structure (ROPS); Side Frame; Swing Frame; Track Frame; Undercarriage Frame; X-Frame; Z-bar loader linkage (including bell crank and bucket driver link); Specialty booms and arms marketed as "heavy duty" by John Deere.

   *Items Covered by StructurALL for Cut-to-Length Forestry Machines*: Front frame (welded assembly); Rear frame (welded assembly); Crane king post with basement; Middle joint frame; Cabin swing frame; Main Boom

   StructurALL Warranty does not apply to:

   1. Any product used primarily in extreme duty or severe duty applications such as but not limited to: demolition and wrecking, chemical plant (including fertilizer plants), salt mines, steel mill, land fill and transfer stations, scrap handling, scarifying and other applications that are similarly destructive or similarly heavy duty except specialty booms and arms as stated in Section D.3 above.
   2. C-Frames on Crawlers equipped with root rakes or used in forestry applications unless equipped with an "extreme duty" reinforcement package.
   3. Cut-to-Length Forestry Heads and Slash Bundler Units.
   4. Crawlers equipped with optional side booms.
   5. Cut-to-Length Forestry, Excavator, and Log Loader swing bearings.
   6. Motor Graders equipped with front- or rear-mounted snow wings.

## E. ITEMS NOT COVERED -

John Deere is NOT responsible for the following:

1. Freight
2. Adjustments to compensate for wear, for periodic maintenance or adjustments that result from normal wear and tear.
3. Damage caused by unapproved adjustments (electronic or mechanical) to machine or machine components outside of published specifications including but not limited to engine, hydraulic components and relief valves.
4. Program updates, calibrations, and pressure adjustments.
5. Additional Labor Time - Above Dealer Labor Rate
6. Additional Cleaning - Above Dealer Labor Rate
7. Rental Fees
8. Depreciation or damage caused by normal wear or application, lack of reasonable and proper maintenance, failure to follow operating instructions, misuse, lack of proper protection during storage, vandalism, negligence, collision, or other accidents.
9. Premiums charged for Overtime Labor
10. Transportation to and from the dealership.
11. Travel time, mileage, or service calls by the dealer.
12. Non-John Deere components or modifications, Rotobec grapples, and attachments installed aftermarket.
13. Shop supplies and maintenance items such as, but not limited to: filters, fuels, oil, hydraulic fluid, lubricants, coolants, conditioners, shop towels, cleaners and degreasers.
14. Torn, cut, or worn hoses.
15. Wear items, such as, but not limited to: body liner, belts, blades, bulbs, lubricated joints (including pins and bushings), dry brakes, brake linings, dry clutch linings, saw blades, chains, skidder grapple shocks, color marking nozzles, and articulation bumpers.
16. Items such as cutting-edge parts, delimbing knives, bucket teeth and rubber track are not warranted for depreciation or damage caused by normal wear, lack of proper maintenance, misuse, failure to follow operating instructions, the elements or accident.
17. Any defect in a non-covered component, or damage to or failure of a covered component caused by a defect in a non-covered component.
18. Secondary damage which occurs from continued operation of a product after recognition of the occurrence of a failure.
19. Parts supplied by or repairs, maintenance or modifications performed by someone other than an authorized John Deere dealer, including any damage caused by such use of parts, repairs, maintenance, or modifications not performed by an authorized John Deere dealer.
20. Topping off fluids when fluid levels fall in the range between low and full
21. Parts/Kits not ordered on machine and installed aftermarket. These parts will be covered by any applicable parts warranty.
22. Attachments installed aftermarket – i.e., Winch not installed at factory.
23. Custom options installed outside the factory – i.e., G.R. Manufacturing option packages.
24. Used Products (except as otherwise provided in section L below).

## F. TERMINATION OF WARRANTY-

John Deere is relieved of its obligations under Standard Warranty, StructurALL Warranty, Factory-Installed Undercarriage Warranty and/or Extended Warranty if:

1. The product is modified or altered in ways not approved by John Deere; or
2. Any unapproved or improperly sized attachment is installed on the product. Approval and attachment size shall be at John Deere's sole discretion. (Consult dealer prior to installing attachments or product modification).
3. The product is moved outside the US and/or Canada.

## G. PARTS REPLACED UNDER WARRANTY -

Only new or remanufactured parts or components furnished or approved by John Deere, will be used if John Deere elects to repair the product. If any such part or component is defective in material or workmanship when installed in the product, John Deere will repair or replace, as it elects, such defective part or component, provided the defect is reported to an authorized John Deere dealer within 90 days of installation or before expiration of the applicable Standard Warranty, Factory-Installed Undercarriage Warranty and/or StructurALL Warranty whichever is later.

## H. TELEMATICS

*NOTICE: Products may be equipped with telematics hardware and software ("Telematics") that transmit data to John Deere/ Dealer. Purchaser may deactivate Telematics at www.jdlink.com.*

Notwithstanding Purchaser's right, title or interest in the Products, Purchaser agrees that John Deere and Dealer (their affiliates, successors and assigns), without further notice to Purchaser have the right to:

1. Access, use, collect and disclose any data generated by, collected by, or stored in, Products or any hardware or devices interfacing with Products ("Machine Data");
2. Access Machine Data directly through data reporting devices integrated within, or attached to, Products, including Telematics ("Data Reporting Systems"); and
3. Update the Data Reporting Systems software from time to time. Machine Data will only be used in accordance with John Deere's Machine Data Policy, located at www.JohnDeere.com/MachineDataPolicy.

## I. OBTAINING WARRANTY SERVICE -

To obtain warranty service, the purchaser must request warranty service from a John Deere dealer authorized to sell the product to be serviced. When making such a request, the purchaser must present evidence of the product's delivery date, make the product available at the dealer's place of business, and inform the dealer in what way the purchaser believes the product to be defective. Standard Warranty, Factory-Installed Undercarriage Warranty and/or StructurALL Warranty repairs may be made in the field if the purchaser and servicing dealer so desire. However, John Deere will not be responsible for any charges (such as dealer travel time, mileage or extra labor) that would not have been incurred had the product been repaired at the dealer's place of business.

## J. NO IMPLIED WARRANTY, CONDITIONS OR OTHER REPRESENTATION -

Where permitted by law, neither John Deere nor any company affiliated with it makes any warranties, representations, conditions or promises, express or implied, as to the quality, performance, or freedom from defect of its products, other than those set forth in this document and **NO IMPLIED WARRANTY OF MERCHANTABILITY, CONDITIONS OR FITNESS IS MADE.**

## K. NO DEALER WARRANTY -

The selling dealer makes no warranty of its own on any item covered by this warranty and makes no warranty on other items unless the dealer delivers to the purchaser a separate written warranty certificate specifically warranting the item. **The dealer has no authority to make any representation or promise on behalf of John Deere, or to modify the terms or limitations of this warranty in any way.**

## L. USED JOHN DEERE PRODUCTS ONLY -

John Deere will transfer remaining Standard Warranty, Factory-Installed Undercarriage Warranty and/or StructurALL Warranty to the purchaser of a used John Deere construction and/or forestry product that has been used for less than the full warranty period provided at the product's original retail purchase. This transfer is not effective until change of ownership is registered by a John Deere dealer. **ALL THE TERMS, INLCUDING LIMITATIONS AND EXCLUSIONS, OF THE JOHN DEERE STANDARD WARRANTY, FACTORY-INSTALLED UNDERCARRIAGE WARRANTY, AND/OR STRUCTURALL WARRANTY ORIGINALLY PROVIDED FOR THE PRODUCT REMAIN IN EFFECT AND APPLICABLE.**